RoHS Compliance

REV	SYM	Revision Record	Appr.	Date
V0	KLS07214	New Version Release	WuHao	2026-07-17

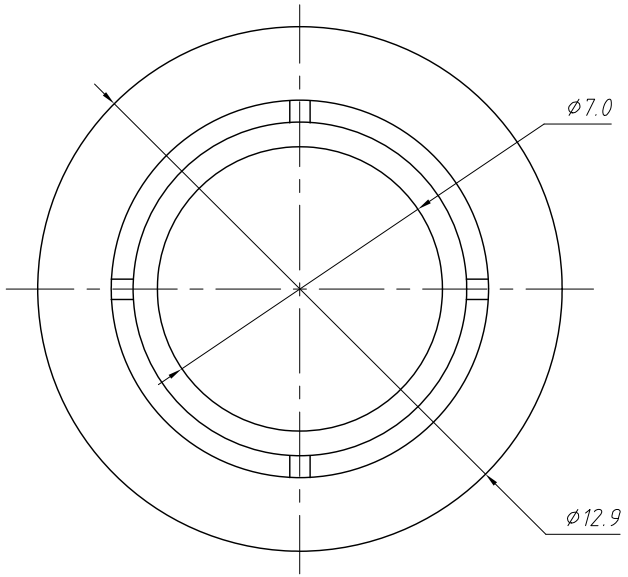

Material:ABS

Note: There are no burrs, shrinkage, missing materials, or obvious color differences on the surface

Order Information

L-KLS7-TSL12-R x

- RoHS
- Series NO.
- R-Round cap
- Color:B-Black G-Gray L- Blue R-Red

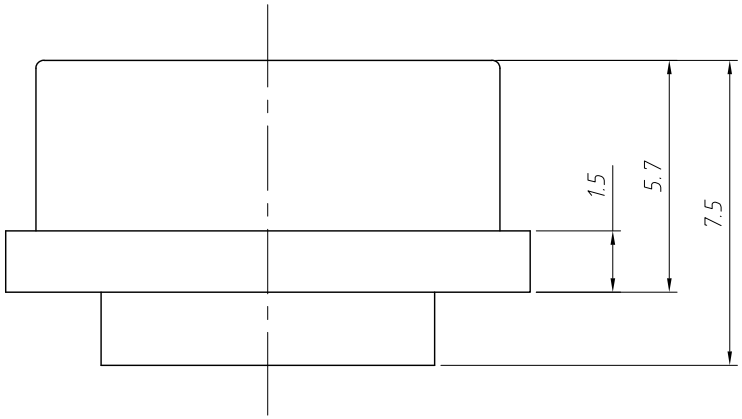

ANGLE TOLERANCE	PROJECTION		Description:	Switch Cap
±3°				
GENERAL TOLERANCE	UNITS	mm	KLS P/N:	L-KLS7-TSL12-Rx
x.x ±0.30	SHEET SIZE	A4		
x.xx ±0.20	Draw:	WuHao	2026-07-17	NingBo KLS ELECTRONIC CO.,LTD.
x.xxx ±0.10	Check:	Daniel	2026-07-17	