RoHS Compliance

REV	SYM	Revision Record	Appr.	Date
V0	KLS07214	New Version Release	WuHao	2026-08-13

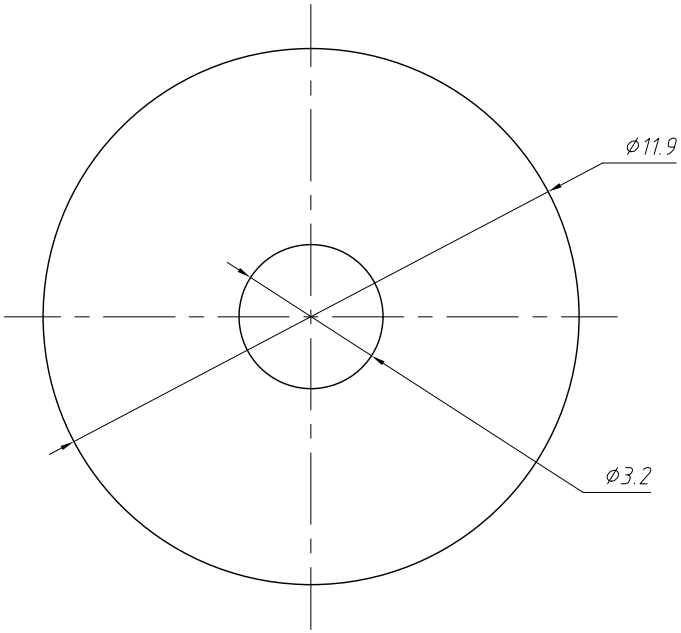

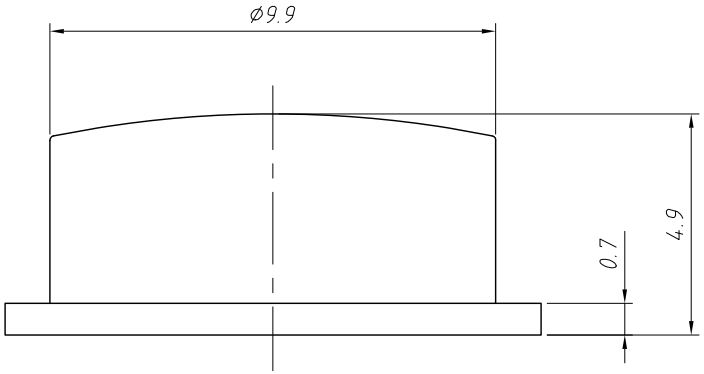

Order Information:

L-KLS7-SC011-x

L: RoHS

Color:

R-Red G-Green L-Blue

GR-Gray B-Black W-White Y-Yellow

Note:

There are no burrs, shrinkage, missing materials, or obvious color differences on the surface;

ANGLE TOLERANCE	PROJECTION		Description:	Switch Caps,ABS
±3°				
GENERAL TOLERANCE	UNITS	mm	KLS P/N:	L-KLS7-SC011-x
x.x ±0.30	SHEET SIZE	A4		NingBo KLS ELECTRONIC CO.,LTD.
x.xx ±0.20	Draw:	WuHao	2026-08-13	
x.xxx ±0.10	Check:	Daniel	2026-08-13	