RoHS Compliance

REV	SYM	Revision Record	Appr.	Date
V0	KLS07214	New Version Release	WuHao	2026-06-23

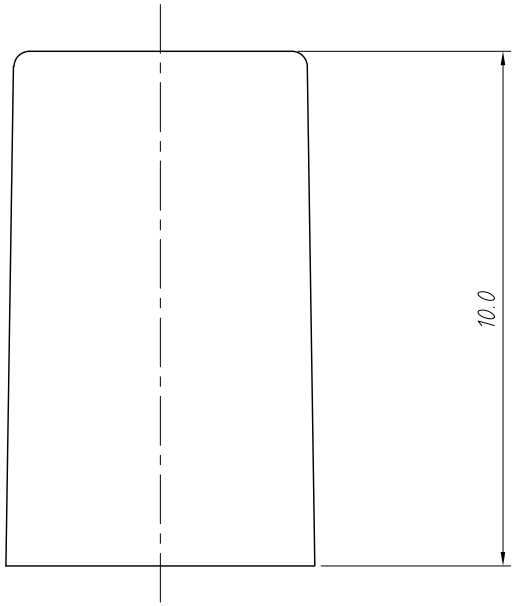

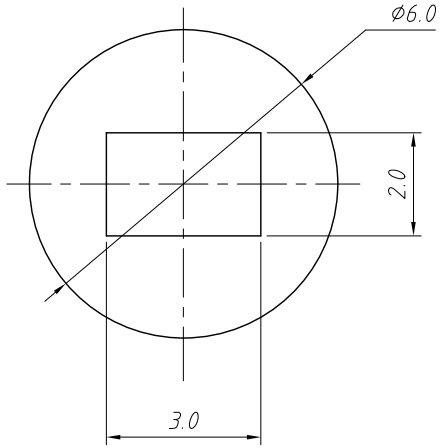

Material:ABS,Blue

Technical Requirements:
No burrs, shrinkage, material deficiency, or noticeable color differences on the surface;

ANGLE TOLERANCE	PROJECTION		Description:	Push Switch Caps Ø6x10mm
±3°				
GENERAL TOLERANCE	UNITS	mm	KLS P/N:	L-KLS7-SC001-BL
x.x ±0.30	SHEET SIZE	A4		
x.xx ±0.20	Draw:	WuHao	2026-06-23	NingBo KLS ELECTRONIC CO.,LTD.
x.xxx ±0.10	Check:	Daniel	2026-06-23	