RoHS Compliance

REV	SYM	Revision Record	Appr.	Date
V0	KLS07214	New Version Release	Song	2026-08-06

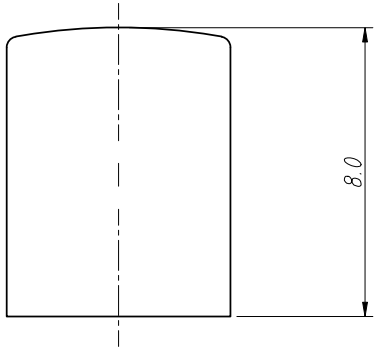

Material:Plastic

Notes:

1. The surface is free of burrs,shrinkage,missing materials, and obvious color differences;

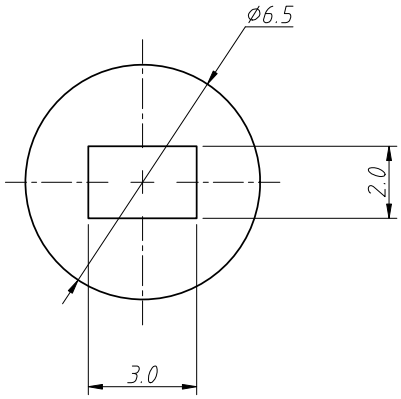

Order Information

L-KLS7-SC005-x

RoHS

Color: R-Red

G-Green L-Blue Y-Yellow

GR-Gray B-Black W-White

ANGLE TOLERANCE	PROJECTION		Description:	
±3°			Push Switch Caps	
GENERAL TOLERANCE	UNITS	mm	KLS P/N:	L-KLS7-SC005-x
x.x ±0.30	SHEET SIZE	A4		
x.xx ±0.20	Draw:	Song	2026-08-06	NingBo KLS ELECTRONIC CO.,LTD.
x.xxx ±0.10	Check:	Daniel	2026-08-06	