RoHS Compliance

REV	SYM	Revision Record	Appr.	Date
V0	KLS07214	New Version Release	WuHao	2026-07-09

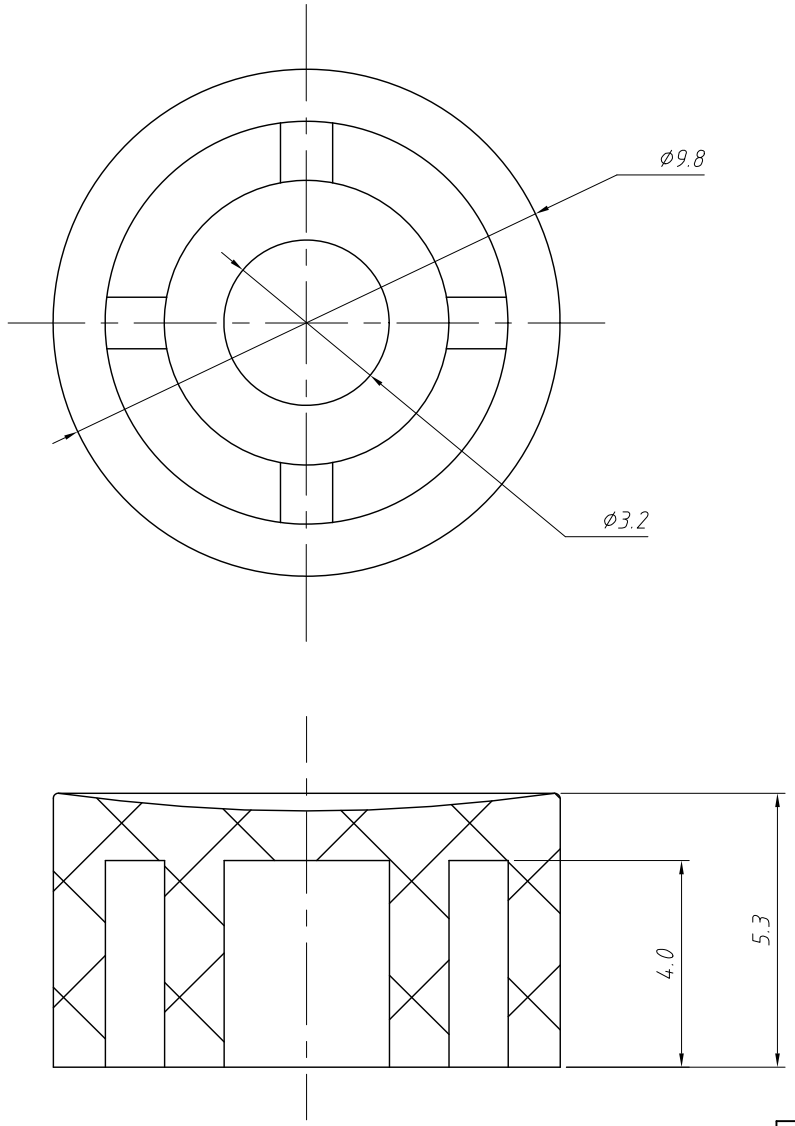

Material:ABS

Note:
There are no burrs, shrinkage, missing materials,
or obvious color differences on the surface

Order Information:
L-KLS7-SC010-x

L: RoHS
Color:
R-Red G-Green BL-Blue
GR-Gray B-Black W-White
Y-Yellow

ANGLE TOLERANCE	PROJECTION		Description:	Switch Caps
±3°				
GENERAL TOLERANCE	UNITS	mm	KLS P/N:	L-KLS7-SC010-x
x.x ±0.30	SHEET SIZE	A4		
x.xx ±0.20	Draw:	WuHao	2026-07-09	NingBo KLS ELECTRONIC CO.,LTD.
x.xxx ±0.10	Check:	Daniel	2026-07-09	