RoHS Compliance

REV	SYM	Revision Record	Appr.	Date
V0	KLS07004	New Version Release	Song	2024-09-04

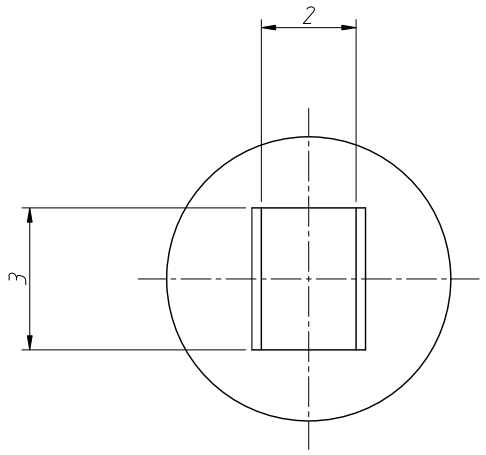

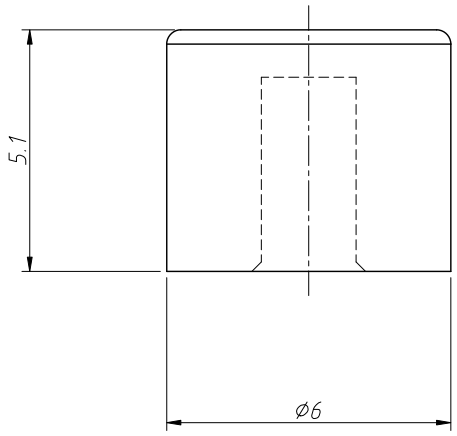

Material:ABS

Notes:

1. The surface of the workpiece should be bright, without defects such as bubbles, missing glue, scratches, shrinkage, cloud patterns, and water splashes
2. No process waste
3. Unmarked tolerances shall be in accordance with GB/T1804-f grade
4. The product color is based on customer requirements.

Order Information

L-KLS7-SC004-X

RoHS

Color: R-Red

G-Green L-Blue

GR-Gray B-Black W-White

Y-Yellow

ANGLE TOLERANCE	PROJECTION		Description:	
±3°				Push Switch Caps
GENERAL TOLERANCE	UNITS	mm	KLS P/N:	L-KLS7-SC004-X
.x ±0.30	SHEET SIZE	A4		
.xx ±0.20	Draw:	Song	2024-09-04	NingBo KLS ELECTRONIC CO.,LTD.
.xxx ±0.10	Check:	Daniel	2024-09-04	