RoHS Compliance

REV	Revision Record	Appr.	Date
V0	New Version Release	Jenny	2023-09-07
V1.0	Specifications Change	WuHao	2026-11-09

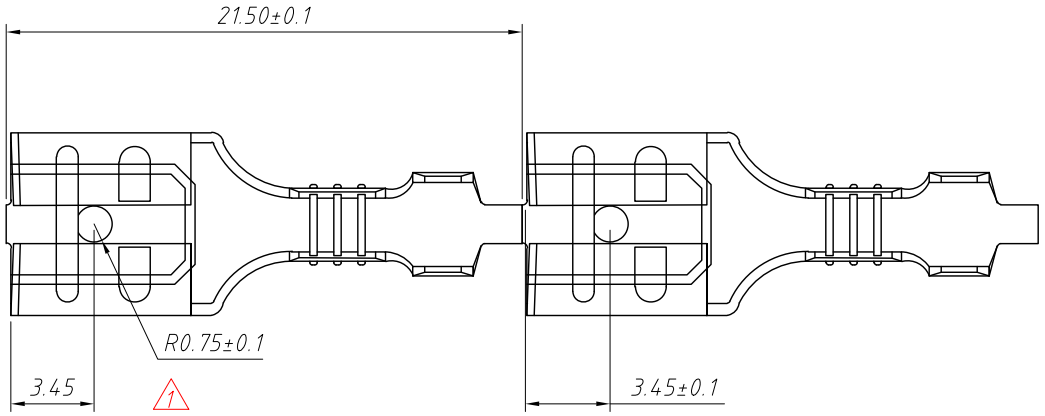

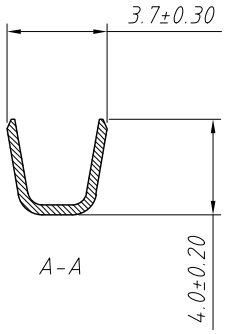

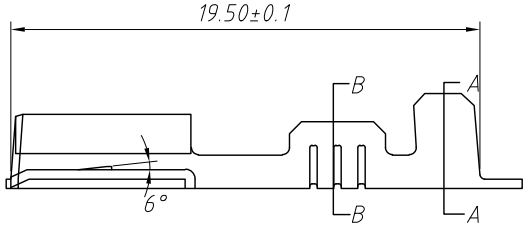

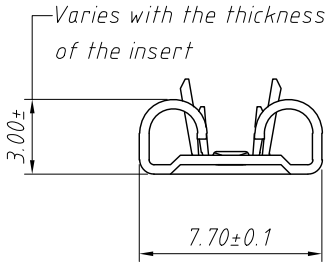

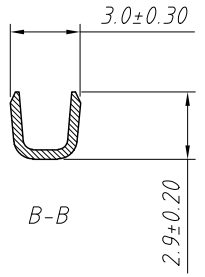

Technical Requirement:

Material:H62, Thickness 0.4mm, Tin plating,

The mark correct and lucid, terminal should be without fracture、burr、deformation and scratches;

The surface coating should be uniform、sheeny、without mildew spot、blackening、delamination and any other defects.

Products bending parts should not have any mechanical damages and not easy to break, the incision burr ≤0.2 mm.

ANGLE TOLERANCE	PROJECTION		Description:	
±3°				Non Insulated Terminals
GENERAL TOLERANCE	UNITS	mm	KLS P/N:	L-KLS8-DFE02-2500800
x.x ±0.30	SHEET SIZE	A4		
x.xx ±0.20	Draw:	Daniel	2023-09-07	NingBo KLS ELECTRONIC CO.,LTD.
x.xxx ±0.10	Check:	Daniel	2023-09-07	