RoHS Compliance

REV	SYM	Revision Record	Appr.	Date
V0	KLS01695	New Version Release	Jenny	2025-04-23

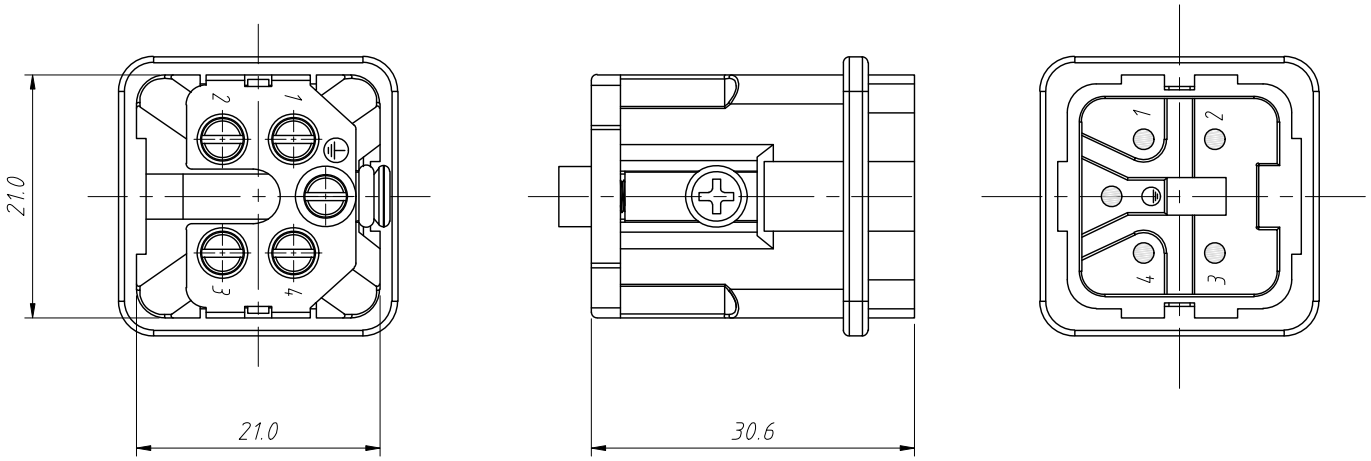

Material:
Housing:Polycarbonate,UL 94 V-0
Colour:RAL 7032 (Light grey)
Contacts:Copper Alloy,Hard-silver plated
Wire gauge:0.75-1.5mm ^{2} (18-16 AWG)
Tightening Torque:0.25N.m
Terminal:Screw terminal

Electrical Characteristics:
Number of contacts:4+PE
Rated Current:10A
Rated Voltage-ground:230V
Rated Voltage-conductor:400V
Rated Impulse Voltage:4KV
Pollution Degree:3
Rated Voltage Acc.to UL CSA:600V
Insulation Resistance:10^{10} Ω Min
Contact Resistance:1mΩ Max
Limiting Temperatures:-40°C ~ +125°C
Mating cycles:500 Times Min

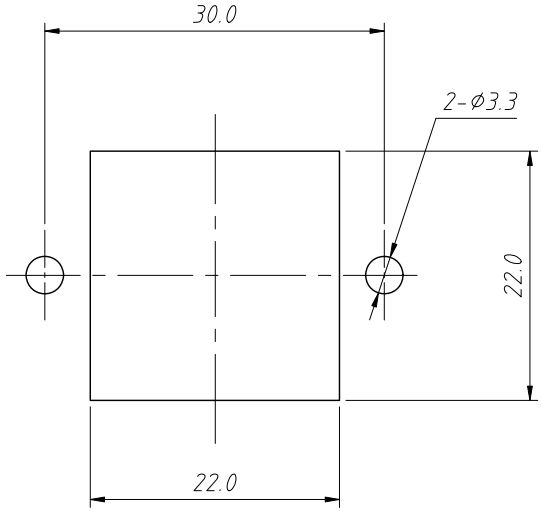

Panel Cut

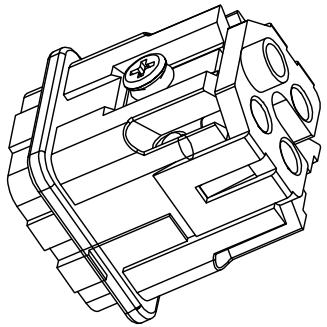

Order Information:

L-KLS1-HA-004 M

- L:RoHS
- HA series
- No of contacts
- Type:
- Male Screw terminal

ANGLE TOLERANCE	PROJECTION		Description:	Heavy Duty Connectors,HA series 4 Contacts,Male Screw terminal
±3°				
GENERAL TOLERANCE	UNITS	mm	KLS P/N:	L-KLS1-HA-004M
x.x ±0.30	SHEET SIZE	A4		NingBo KLS ELECTRONIC CO.,LTD.
x.xx ±0.20	Draw:	Jenny	2025-04-23	
x.xxx ±0.10	Check:	Daniel	2025-04-23	