RoHS Compliance

REV	SYM	Revision Record	Appr.	Date
V0	KLS01695	New Version Release	WuHao	2025-05-23

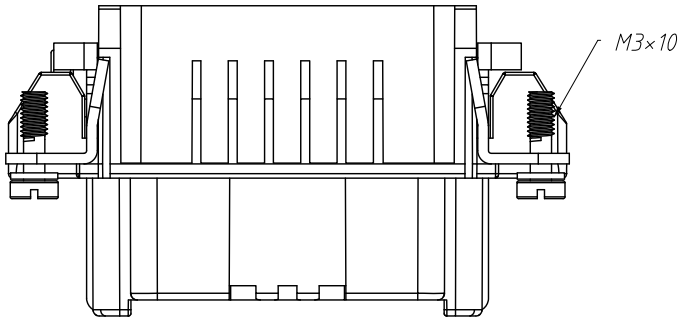

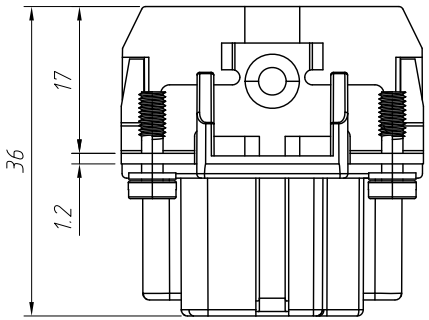

Material:
Housing:Polycarbonate,UL94V-0
Colour:RAL 7032 (Light grey)
Contacts:Copper Alloy,Hard-silver plated
Hard-gold plated
Wire gauge:0.14-2.5mm^2 (26-14 AWG)
Terminal:Crimp terminal
Tools:
Crimp Contact Tool:TL02G
Conatct Removal Tool:TL00

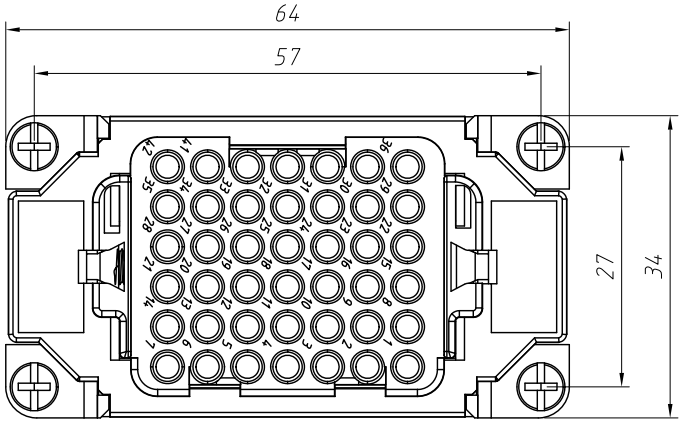

Order Information:
L-KLS1-HDD-042 FC
L:RoHS
HDD series
No of contacts
Type:
Female Crimp terminal

Electrical Characteristics:
Number of contacts:42+PE
Rated Current:10A
Rated Voltage:250V
Rated Impulse Voltage:4KV
Pollution Degree:3
Rated Voltage Acc.to UL CSA:600V
Insulation Resistance:$10^{10}\Omega$ Min
Contact Resistance:3mΩ Max
Limiting Temperatures:-40°C ~ +125°C
Mating cycles:500 Times Min

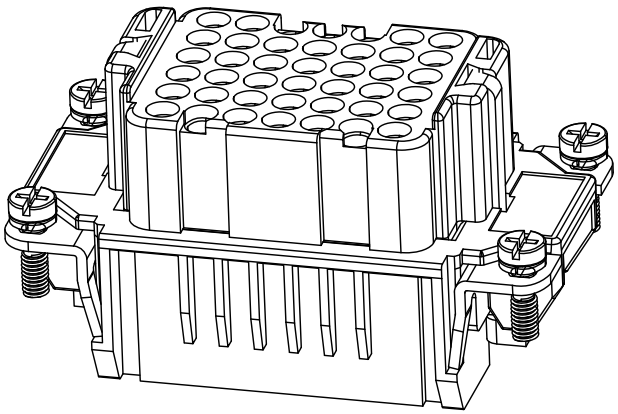

ANGLE TOLERANCE	PROJECTION		Description:	Heavy Duty Connectors,HDD series 42 Contacts,Female Crimp terminal
±3°				
GENERAL TOLERANCE	UNITS	mm	KLS P/N:	L-KLS1-HDD-042FC
x.x ±0.30	SHEET SIZE	A4		NingBo KLS ELECTRONIC CO.,LTD.
x.xx ±0.20	Draw:	WuHao	2025-05-23	
x.xxx ±0.10	Check:	Daniel	2025-05-23	