RoHS Compliance

| REV | SYM | Revision Record | Appr. | Date |
|---|---|---|---|---|
| V0 | KLS-WN | New Version Release | Song | 2025-07-14 |
| | | | | |

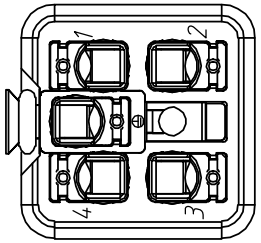


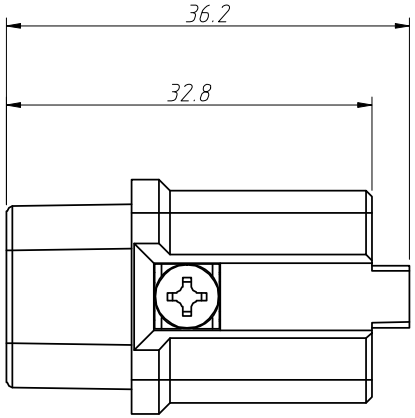


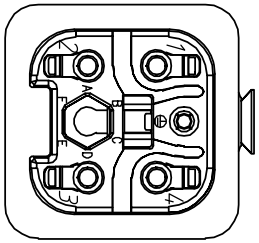


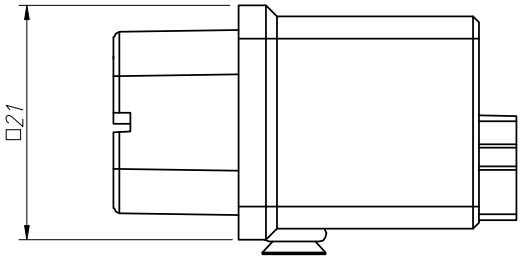


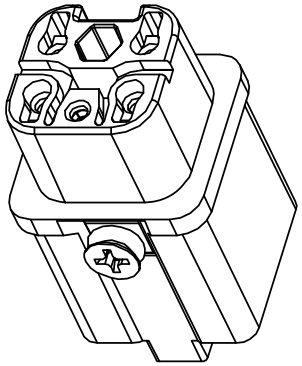

Material:
Housing:Polycarbonate,UL 94 V-0
Colour:RAL 7032 (Light grey)
Contacts:Copper Alloy,Hard-silver plated
Wire gauge:0.5~4.0mm$^2$ (20-12 AWG)
(For wires with crimped ferrule,wire gauge:0.14-2.5mm$^2$ AWG 26~14)
Stripping Length:10 ±0.5 mm
Terminal:Quick Spring Terminal

Electrical Characteristics:
Number of contacts:4+PE
Rated Current:10A
Rated voltage-ground: 230V/400V
Rated impulse voltage: 4kV
Pollution Degree:3
Insulation Resistance:$10^{10}$Ω Min
Contact Resistance:3mΩ Max
Limiting Temperatures:-40°C~+125°C
Mating cycles:500 Times Min

Order Information:
L-KLS1-HA-004 FQ
L:RoHS
HA series
No of contacts
Type:
Female Quick Spring Terminal

| ANGLE TOLERANCE | PROJECTION | | Description: | Heavy Duty Connectors,HA series 4 Contacts,Female Quick Spring Terminal |
|---|---|---|---|---|
| ±3° | | | | |
| GENERAL TOLERANCE | UNITS | mm | KLS P/N: | L-KLS1-HA-004FQ |
| x.x ±0.30 | SHEET SIZE | A4 | | NingBo KLS ELECTRONIC CO.,LTD. |
| x.xx ±0.20 | Draw: | Song | 2025-07-14 | |
| x.xxx ±0.10 | Check: | Daniel | 2025-07-14 | |