RoHS Compliance

REV	SYM	Revision Record	Appr.	Date
V0	KLS-WN	New Version Release	Song	2025-07-14

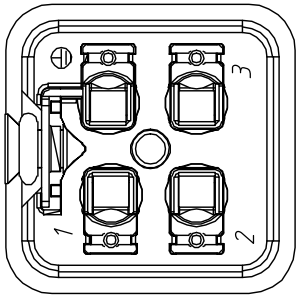

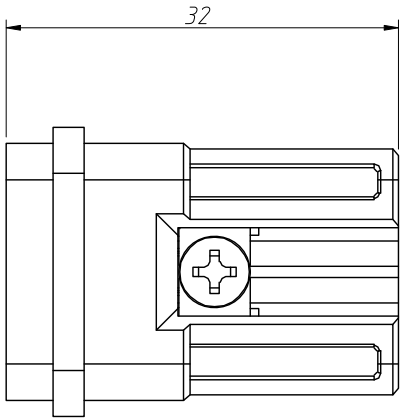

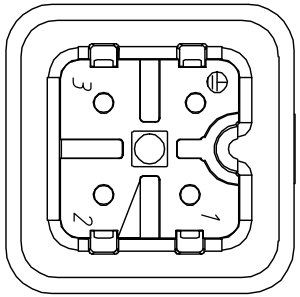

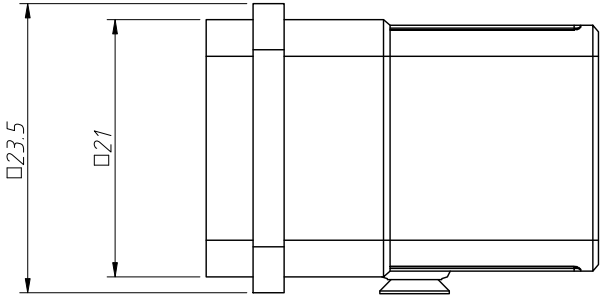

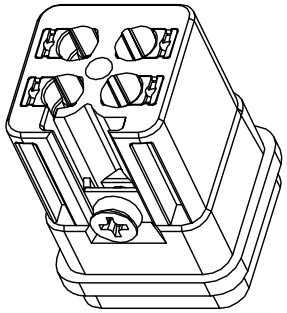

Material:
Housing:Polycarbonate,UL 94 V-0
Colour:RAL 7032 (Light grey)
Contacts:Copper Alloy,Hard-silver plated
Wire gauge:0.5~4.0mm^2 (20-12 AWG)
(For wires with crimped ferrule,wire gauge:0.14-2.5mm^2 AWG 26~14)
Stripping Length:10 ±0.5 mm
Terminal:Quick Spring Terminal

Electrical Characteristics:
Number of contacts:3+PE
Rated Current:10A
Rated voltage: 230V/400V
Rated impulse voltage: 4kV
Pollution Degree:3
Insulation Resistance:10^{10} Ω Min
Contact Resistance:3mΩ Max
Limiting Temperatures:-40°C~+125°C
Mating cycles:500 Times Min

Order Information:
L-KLS1-HA-003 MQ
L:RoHS
HA series
No of contacts
Type:
Male Quick Spring Terminal

ANGLE TOLERANCE	PROJECTION		Description:	Heavy Duty Connectors,HA series 3 Contacts,Male Quick Spring Terminal
±3°				
GENERAL TOLERANCE	UNITS	mm	KLS P/N:	L-KLS1-HA-003MQ
x.x ±0.30	SHEET SIZE	A4		
x.xx ±0.20	Draw:	Song	2025-07-14	NingBo KLS ELECTRONIC CO.,LTD.
x.xxx ±0.10	Check:	Daniel	2025-07-14	