RoHS Compliance

REV	SYM	Revision Record	Appr.	Date
V0	KLS-WN	New Version Release	Song	2025-07-14

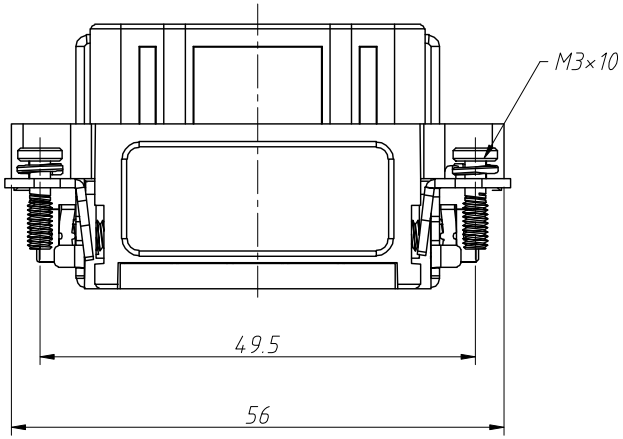

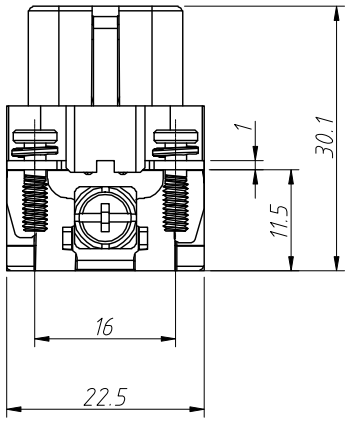

Material:
Housing:Polycarbonate,UL94V-0
Colour:RAL 7032 (Light grey)
Contacts:Copper Alloy,Hard-silver plated
Wire gauge:0.14~2.5mm^2 (26-14 AWG)
(For wires with crimped ferrule,wire gauge:0.14-1.5mm^{2}AWG16)
Terminal:Spring terminal

Electrical Characteristics:
Number of contacts:10+PE
Rated Current:16A
Rated voltage:250V
Rated impulse voltage: 4kV
Pollution Degree:3
Rated Voltage Acc.to UL/CSA:600V
Insulation Resistance:10^{10}Ω Min
Contact Resistance:1mΩ Max
Limiting Temperatures:-40°C~+125°C
Mating cycles:500 Times Min

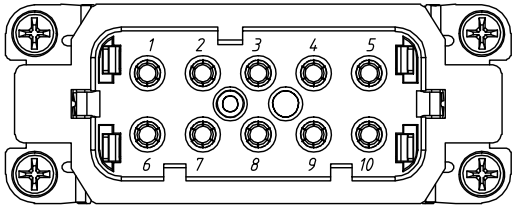

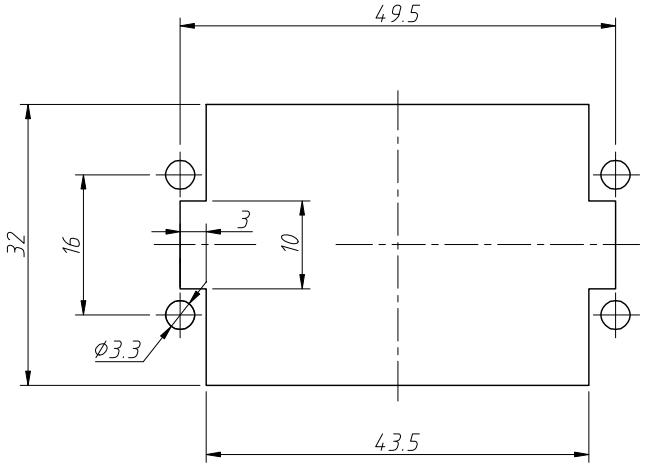

Panel Cut Out

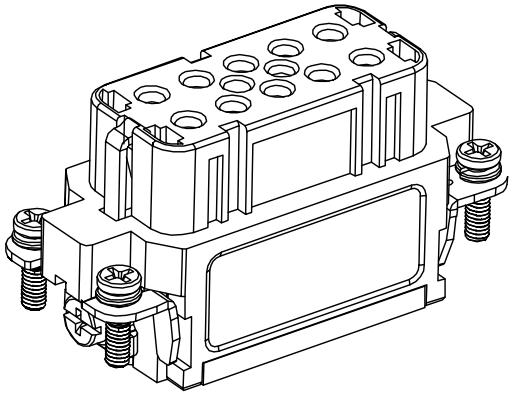

Order Information:

L-KLS1-HA-010 FS

- L:RoHS
- HA series
- No of contacts
- Type:
- Female Spring terminal

ANGLE TOLERANCE	PROJECTION		Description:	Heavy Duty Connectors,HA series 10 Contacts,Female Spring terminal
±3°				
GENERAL TOLERANCE	UNITS	mm	KLS P/N:	L-KLS1-HA-010FS
x.x ±0.30	SHEET SIZE	A4		
x.xx ±0.20	Draw:	Song	2025-07-14	NingBo KLS ELECTRONIC CO.,LTD.
x.xxx ±0.10	Check:	Daniel	2025-07-14	