RoHS Compliance

REV	SYM	Revision Record	Appr.	Date
V0	KLS-WN	New Version Release	Song	2025-07-14

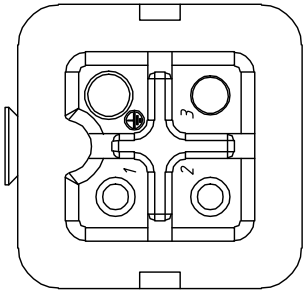

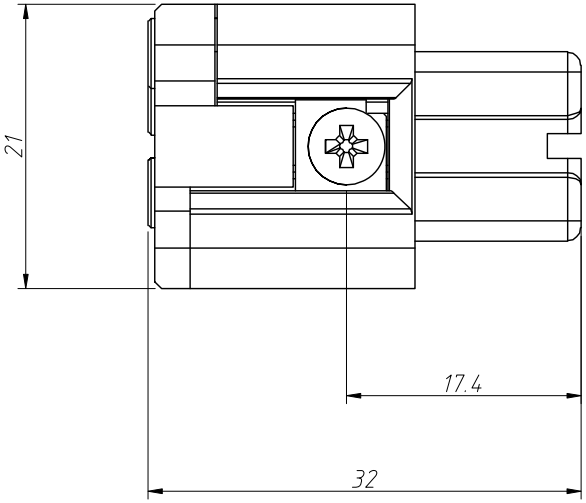

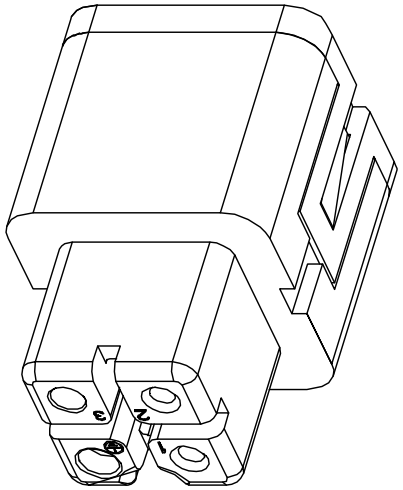

Material:
Housing:Polycarbonate,UL94V-0
Colour:RAL 7032 (Light grey)
Contacts:Copper Alloy,Hard-silver plated
Wire gauge:0.14~2.5mm^2 (26-14 AWG)
(For wires with crimped ferrule,wire gauge:0.14-1.5mm^{2}AWG16)
Terminal:Spring terminal

Electrical Characteristics:
Number of contacts:2+PE
Rated Current:10A
Rated voltage-ground: 230V
Rated voltage-conductor:400V
Rated impulse voltage: 4kV
Pollution Degree:3
Rated Voltage Acc.to UL/ CSA:600V
Insulation Resistance:10^{10}Ω Min
Contact Resistance:1mΩ Max
Limiting Temperatures:-40°C~+125°C
Mating cycles:500 Times Min

Order Information:
L-KLS1-HA-002 FS
L:RoHS
HA series
No of contacts
Type:
Female Spring terminal

ANGLE TOLERANCE	PROJECTION		Description:	Heavy Duty Connectors,HA series 2 Contacts,Female Spring terminal
±3°				
GENERAL TOLERANCE	UNITS	mm	KLS P/N:	L-KLS1-HA-002FS
x.x ±0.30	SHEET SIZE	A4		NingBo KLS ELECTRONIC CO.,LTD.
x.xx ±0.20	Draw:	Song	2025-07-14	
x.xxx ±0.10	Check:	Daniel	2025-07-14	