RoHS Compliance

REV	SYM	Revision Record	Appr.	Date
V0	KLS01058	New Version Release	Song	2018-07-10
V1.0	△1	Process Improvement	Song	2025-12-23

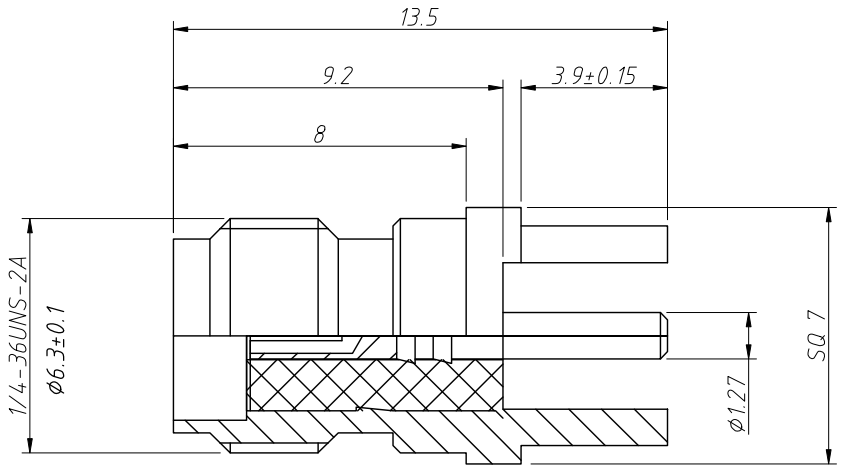

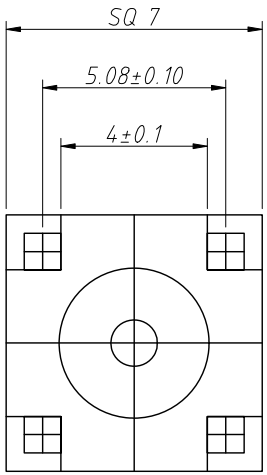

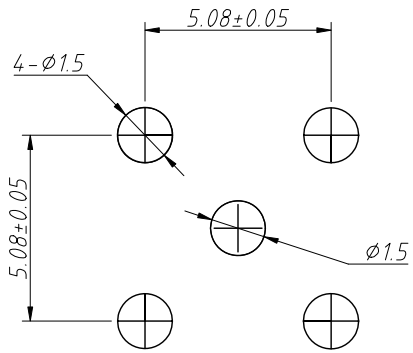

PCB Layout

Description:
Material:
Connector Body:Brass,0.015~0.03um Gold Plated On Surface
Inner conductor:Brass,Gold Plated
Insulator: PTFE,White

Impedance:50Ω
Frequency Range: 0~6GHz
Working Temperature: -55℃~+155℃
Durability :500 Cycles Min

ANGLE TOLERANCE	PROJECTION		Description:	
±3°				SMA Connector
GENERAL TOLERANCE	UNITS	mm	KLS P/N:	L-KLS1-SMA253
x.x ±0.30	SHEET SIZE	A4		
x.xx ±0.20	Draw:	Song	2018-07-10	NingBo KLS ELECTRONIC CO.,LTD.
x.xxx ±0.10	Check:	Daniel	2018-07-10	