RoHS Compliance

REV	SYM	Revision Record	Appr.	Date
V0	KLS19047	New Version Release	WuHao	2025-04-15

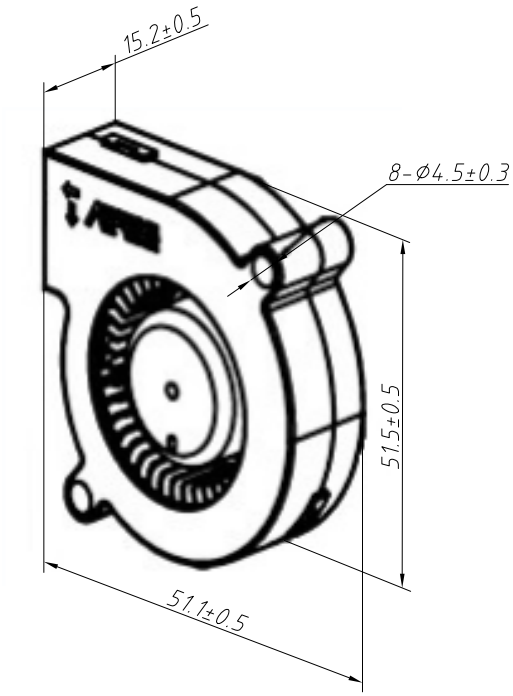

P&Q Curve (Under Rated Voltage)

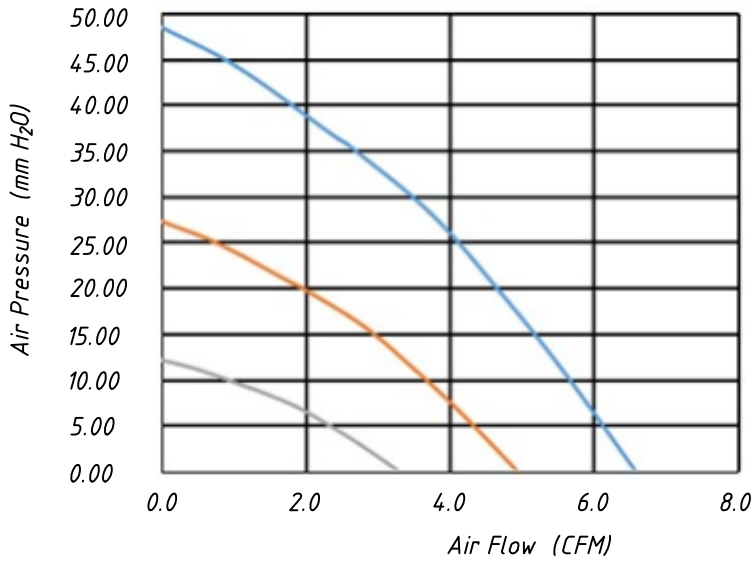

Model	Bearing TYPE	Rated Voltage	Operating Voltage	Rated Current	Rated Inputpower	Speed	Maximum Air Flow		Maximum Air Pressure		Noise	Distance
		V DC	V DC	A MP	WATT	RPM	M^3/Min	CFM	mm H_2O	IN H_2O	dB (A)	m
L-KLS22-LX-5015-LHD12	BB/HDB	12	7~13.2	0.13	1.5	4000	0.092	3.29	12.11	0.477	34.1	1
L-KLS22-LX-5015-MHD12	BB/HDB	12	7~13.2	0.20	2.50	6000	0.138	4.94	27.24	1.072	42.9	1
L-KLS22-LX-5015-MBD12	BB	12	7~13.2	0.35	4.20	8000	0.184	6.58	48.43	1.907	49.6	1
L-KLS22-LX-5015-LHD24	BB/HDB	24	18.0~26.4	0.06	1.5	4000	0.092	3.29	12.11	0.477	34.1	1
L-KLS22-LX-5015-MHD24A	BB/HDB	24	18.0~26.4	0.10	2.50	6000	0.138	4.94	27.24	1.072	42.9	1
L-KLS22-LX-5015-MBD24B	BB	24	18.0~26.4	0.18	4.20	8000	0.184	6.58	48.43	1.907	49.6	1

Material
Housing:Plastic, UL94V-0

Electric:
Insulation Impedance:10MΩ /DC 250V Min
Voltage Withstand Test:AC 500V 1s

ANGLE TOLERANCE	PROJECTION		Description:	
±3°			DC Fans	
GENERAL TOLERANCE	UNITS	mm	KLS P/N:	L-KLS22-LX-5015
.x ±0.30	SHEET SIZE	A4		
.xx ±0.20	Draw:	WuHao	2025-04-15	NingBo KLS ELECTRONIC CO.,LTD.
.xxx ±0.10	Check:	Daniel	2025-04-15	