RoHS Compliance

REV	SYM	Revision Record	Appr.	Date
V0	KLS01165	New Version Release	Song	2025-09-11

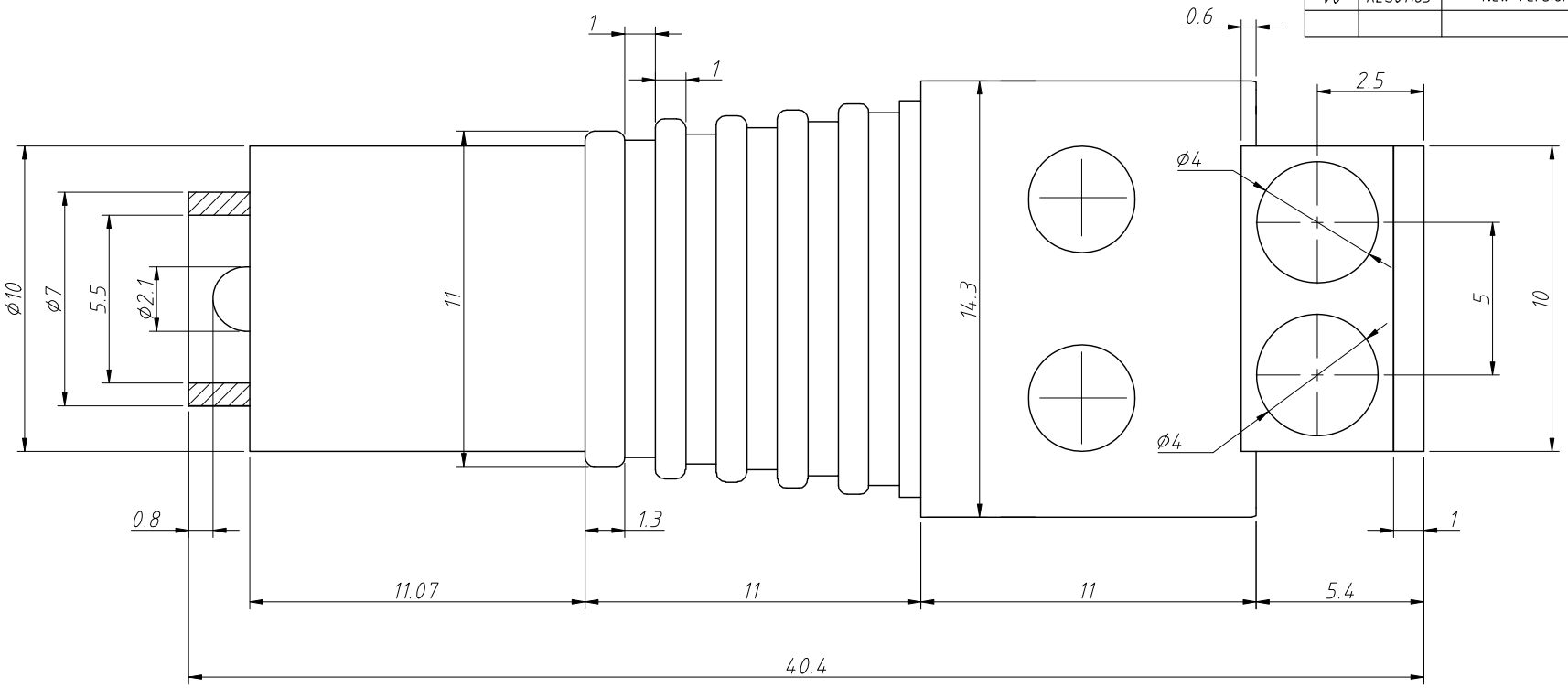

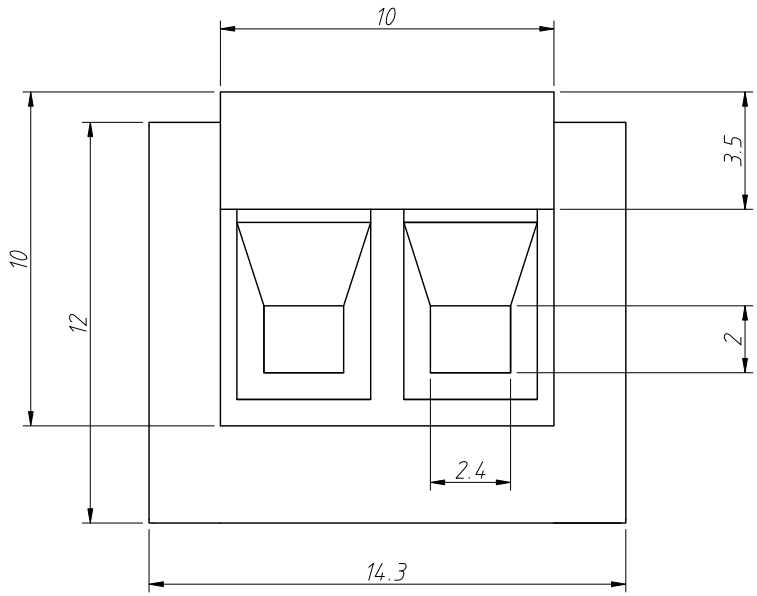

Material
Housing:ABS,Green
Screw:Iron,Nickel Plated
Terminal:Copper,Nickel Plated
Packing:5pcs/Bag

ANGLE TOLERANCE	PROJECTION		Description:	DC Female Terminal
±3°				
GENERAL TOLERANCE	UNITS	mm	KLS P/N:	L-KLS2-DC-05-2.1F-IWP
x.x ±0.30	SHEET SIZE	A4		
x.xx ±0.20	Draw:	Song	2025-09-11	NingBo KLS ELECTRONIC CO.,LTD.
x.xxx ±0.10	Check:	Daniel	2025-09-11	