RoHS Compliance

REV	SYM	Revision Record	Appr.	Date
V0	KLS01058	New Version Release	Song	2025-07-31

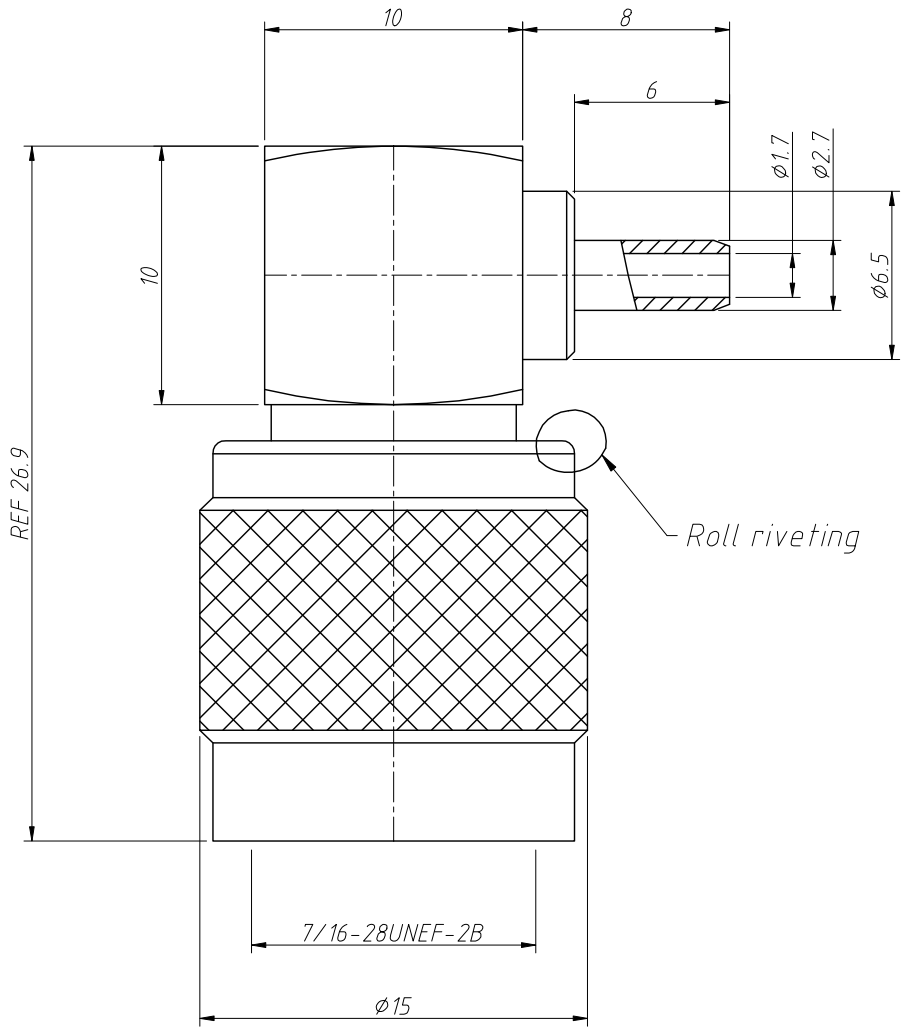

Material:
Body:Brass,Nickel Plated On Surface
and Inner Pin Gold plated
Cover:Brass,Nickel Plated
Tube:Brass,Nickel Plated
Insulator:Teflon

Electric:
Impedance:50Ω
Frequency Range: DC-6GHZ
Insulation Resistance:5000MΩ Min
Durability :500 Cycles Min
Dielectric withstand voltage: 1500V (rms)
Contact Resistance:Inner conductor ≤ 1.5m Ω
External conductor ≤ 1m Ω
Operating Temperature:-45°C ~ +125°C

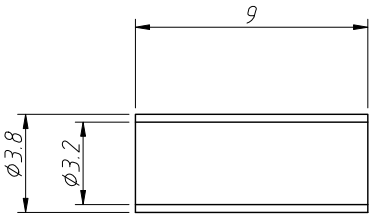

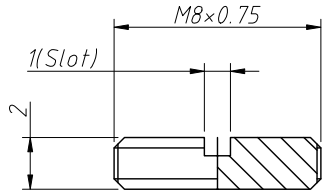

ANGLE TOLERANCE	PROJECTION		Description:	
±3°			TNC Connector	
GENERAL TOLERANCE	UNITS	mm	KLS P/N:	L-KLS1-TNC098-RG316
x.x ±0.30	SHEET SIZE	A4		
x.xx ±0.20	Draw:	Song	2025-07-31	NingBo KLS ELECTRONIC CO.,LTD.
x.xxx ±0.10	Check:	Daniel	2025-07-31	