REV	SYM	Revision Record	Appr.	Date
V0	KLS01323	New Version Release	WuHao	2025-08-20

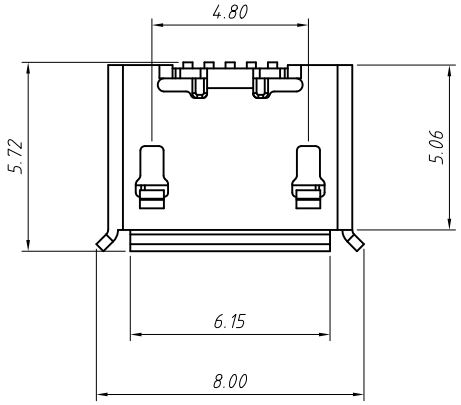

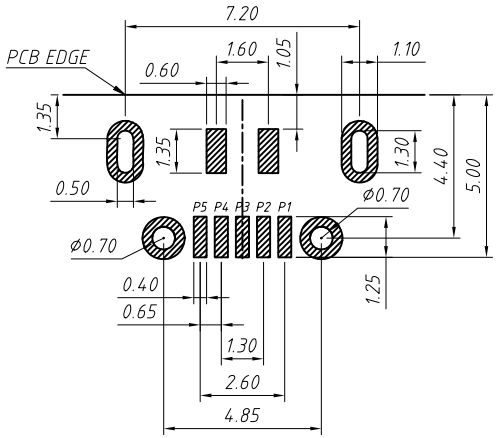

Recommanded PCB Layout

Tolerance:±0.05mm

Material:

Housing:LCP,Black,UL 94 V-0

Contact:C2680, T=0.15mm,

Half Gold Nickel G/F On Functional Area

Shell:C2680, T=0.25mm, Tin Plated

Specification:

Current rating:1 AMax.

Dielectric withtanding volatage:100V(ac)for 1min.

Contact Resistance:50mΩ Max.

Insulation Resistance:100MΩ Min

Total Mating Force:3.57 Kgf Max

Total unmating force:1.0 kgf Min

After Testing:0.81Kgf,Min

Temperature rating:-30°C ~ +80°C

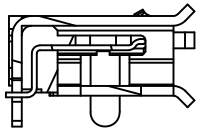

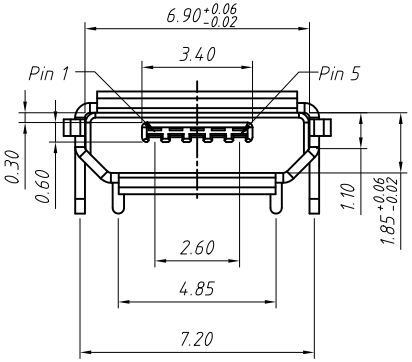

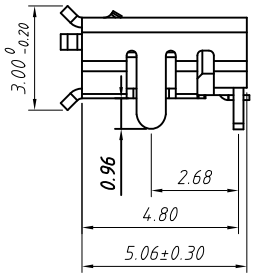

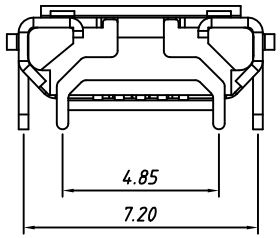

Order Information:

L-KLS1-238-0-0-0-R

- L: RoHS
- Micro USB Female
- 0-Without Post
- Terminal Plated:
  - 0-Gold Plated 1-Tin Plated
- 0-Without Mylar
- Packing:R-Reel Packing

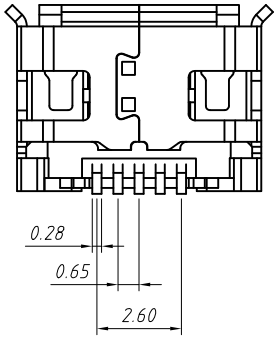

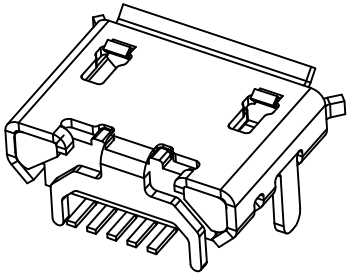

ANGLE TOLERANCE	PROJECTION		Description:	Conn Rcpt 5Pos Micro USB SMD
±3°				
GENERAL TOLERANCE	UNITS	mm	KLS P/N:	L-KLS1-238-0-0-0-R
x.x ±0.30	SHEET SIZE	A4		NingBo KLS ELECTRONIC CO.,LTD.
x.xx ±0.20	Draw:	WuHao	2025-08-20	
x.xxx ±0.10	Check:	Daniel	2025-08-20	