RoHS Compliance

REV	SYM	Revision Record	Appr.	Date
V0	KLS01695	New Version Release	WuHao	2025-05-14

Material:
Housing:Polycarbonate,UL 94 V-0
Colour:RAL 7032 (Light grey)
Contacts:Brass,Hard-silver plated
Wire gauge:
Power arera:1.5~16mm^2 / 16~6 AWG
Signal arera:1.0~2.5mm^2 / 18~14 AWG
Tightening tourque:
Power area:

mm^2:	1.5	2.5	4	6	10	16
N.m:	1.2	2	3	3	3	3

Signal contacts:0.5N.m
Terminal:screw terminal

Electrical Characteristics:
Number of contacts:4/2+PE
Power Area:
Rated Current:80A
Rated Voltage:690V
Rated Impulse Voltage:8KV
Signal Area:
Current Rated:16A
Voltage Rated:400V
Rated Impulse Voltage:6KV
Pollution Degree:3
Insulation Resistance:10^{10} Ω Min
Limiting Temperatures:-40°C~+125°C
Mating cycles:500 Times Min

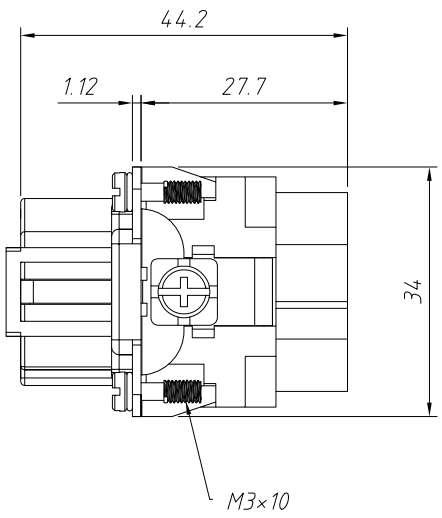

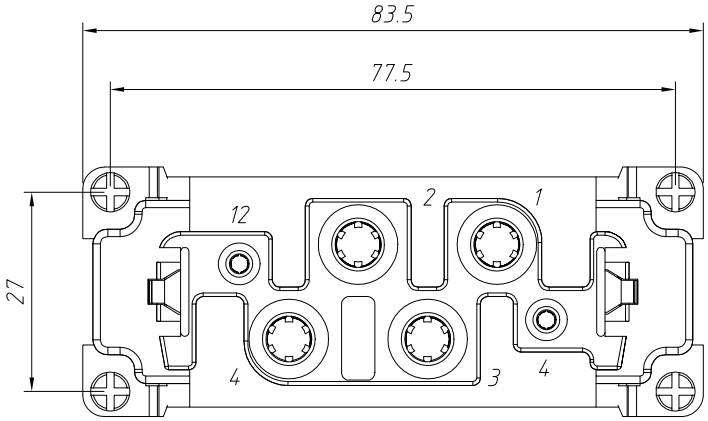

Order Information:
L-KLS1-HK-004-2 F
L:RoHS
HK series
No of contacts
Type:
Famale screw terminal

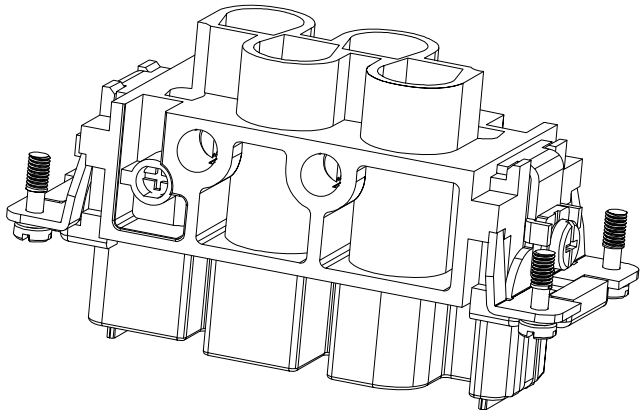

ANGLE TOLERANCE	PROJECTION		Description:	Heavy Duty Connectors,HK series 4+2 Contacts,Famale screw terminal
±3°				
GENERAL TOLERANCE	UNITS	mm	KLS P/N:	L-KLS1-HK-004-2F
x.x ±0.30	SHEET SIZE	A4		NingBo KLS ELECTRONIC CO.,LTD.
x.xx ±0.20	Draw:	WuHao	2025-05-14	
x.xxx ±0.10	Check:	Daniel	2025-05-14	