REV	SYM	Revision Record	Appr.	Date
V0	KLS01695	New Version Release	WuHao	2025-05-12

RoHS Compliance

Material:
Housing:Polycarbonate,UL94V-0
Plastic hoods:Thermoplastic
Locking Element:Polyamide
Hoods:NBR
Colour:RAL 7032 (Light grey)
Contacts:Copper Alloy,Hard-silver plated
Hard-Gold Plated
Wire gauge:
Power Contacts:1.5~6mm^2 (16~10 AWG)
PE contact:2.5mm^2 (14 AWG)
Tools:
Crimping tool:
TL02G (0.5~4mm^2)
TL02 (1.5~6mm^2)
Contact removal tool:
TL00 (For Crimp Contacts 10A)
TL06G (for Crimp Contacts 40A)

Electrical Characteristics:
Number of contacts:4-2+PE
Rated Current:
Power Side:40 A
Signal Side:10 A
Rated Voltage:
Power Side:
Ground:400V (Rated Voltage Conductor)
Conductor:690V (Rated Voltage Conductor)
Signal Side:250V
Rated Impulse Voltage:
Power Side:6KV
Signal Side:4KV
Pollution Degree:3
Rated Voltage Acc.to UL CSA:600/250 V
Insulation Resistance:$10^{10}\Omega$ Min
Contact Resistance:0.3mΩ Max
Limiting Temperatures:-40°C~+125°C
Mating cycles:500 Times Min

Order Information:
L-KLS1-HQ-004-2 FC
L:RoHS
HQ series
No of contacts
Type:
Famale Crimp terminal

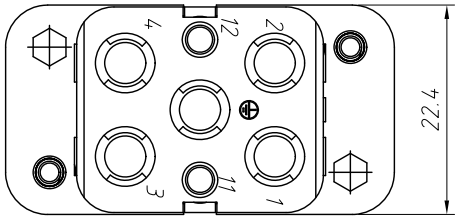

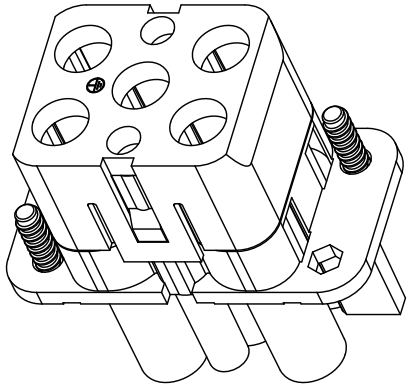

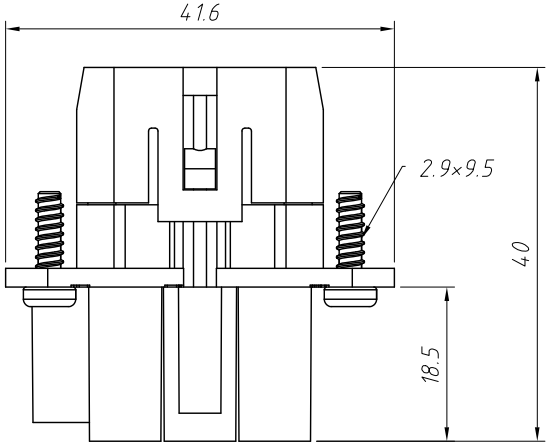

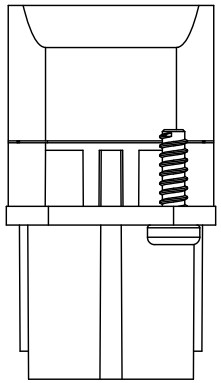

ANGLE TOLERANCE	PROJECTION		Description:	Heavy Duty Connectors,HQ series 4+2 Contacts,Famale Crimp terminal
±3°				
GENERAL TOLERANCE	UNITS	mm	KLS P/N:	L-KLS1-HQ-004-2FC
x.x ±0.30	SHEET SIZE	A4		NingBo KLS ELECTRONIC CO.,LTD.
x.xx ±0.20	Draw:	WuHao	2025-05-12	
x.xxx ±0.10	Check:	Daniel	2025-05-12	