RoHS Compliance

REV	SYM	Revision Record	Appr.	Date
V0	KLS01695	New Version Release	Jenny	2025-05-12

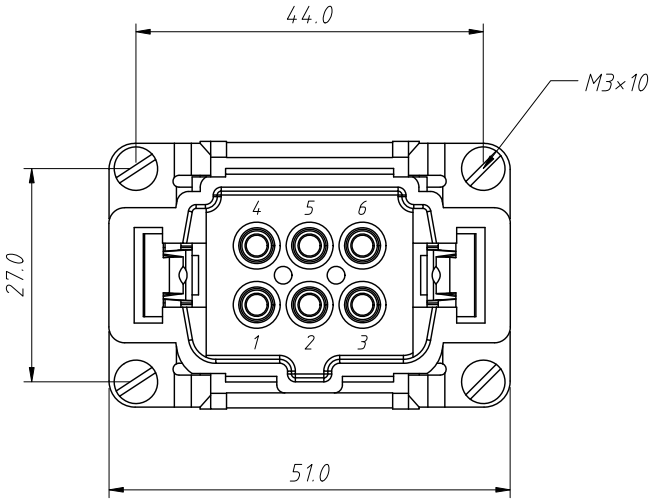

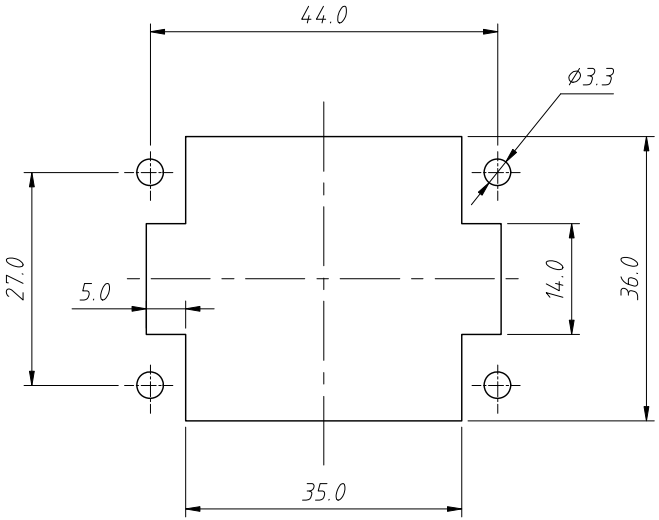

Panel Cut

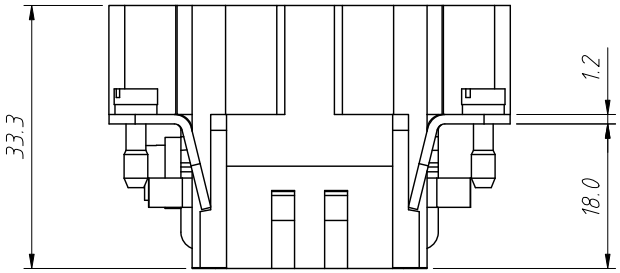

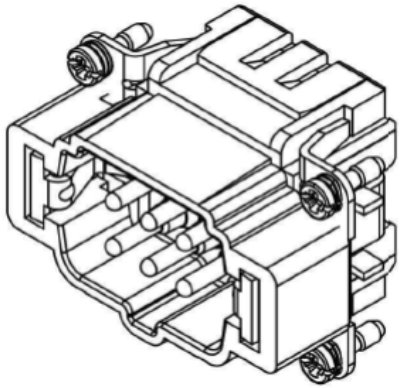

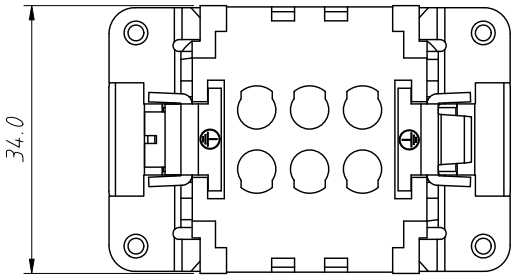

Material:
Housing:Polycarbonate,UL 94 V-0
Colour:RAL 7032 (Light grey)
Contacts:Copper Alloy,Hard-silver plated
Wire gauge:0.14-2.5mm^2 (26-14 AWG)
Stripping length:7-9mm
Terminal:Spring terminal

Electrical Characteristics:
Number of contacts:6+PE
Rated Current:16A
Rated Voltage:500V
Rated Impulse Voltage:6KV
Pollution Degree:3
Rated Voltage Acc.to UL CSA:600V
Insulation Resistance:10^{10} Ω Min
Contact Resistance:1mΩ Max
Limiting Temperatures:-40°C ~ +125°C
Mating cycles:500 Times Min

Order Information:

L-KLS1-HE-006 MS

- L:RoHS
- HE series
- No of contacts
- Type:
- Male Spring terminal

ANGLE TOLERANCE	PROJECTION		Description:	Heavy Duty Connectors,HE series 6 Contacts,Male Spring terminal
±3°				
GENERAL TOLERANCE	UNITS	mm	KLS P/N:	L-KLS1-HE-006MS
x.x ±0.30	SHEET SIZE	A4		
x.xx ±0.20	Draw:	Jenny	2025-05-12	NingBo KLS ELECTRONIC CO.,LTD.
x.xxx ±0.10	Check:	Daniel	2025-05-12	