RoHS Compliance

REV	SYM	Revision Record	Appr.	Date
V0	KLS01695	New Version Release	Jenny	2025-05-07

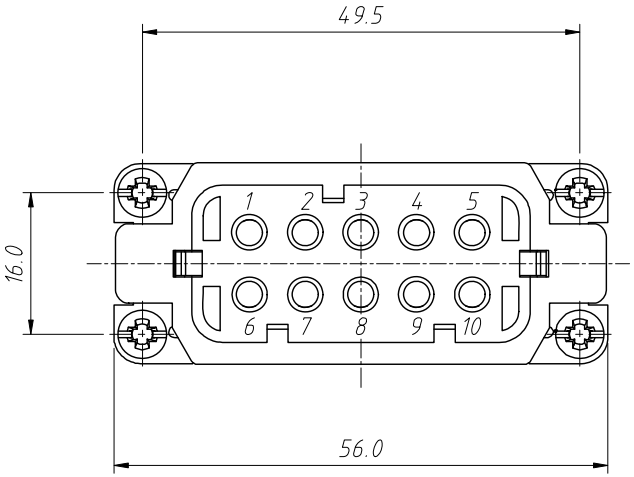

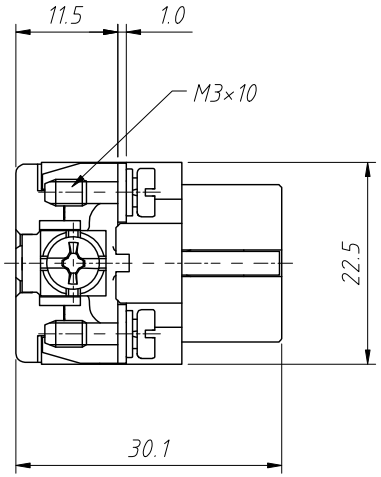

Material:
Housing:Polycarbonate,UL 94 V-0
Colour:RAL 7032 (Light grey)
Contacts:Copper Alloy,Hard-silver plated
Hard-gold plated
Wire gauge:0.14-4.0mm ^{2} (26-12 AWG)
Terminal:Crimp Terminal

Electrical Characteristics:
Number of contacts:10+PE
Rated Current:16A
Rated Voltage-ground:250V
Rated Impulse Voltage:4KV
Pollution Degree:3
Rated Voltage Acc.to UL CSA:600V
Insulation Resistance:10^{10} Ω Min
Contact Resistance:1mΩ Max
Limiting Temperatures:-40°C ~ +125°C
Mating cycles:500 Times Min

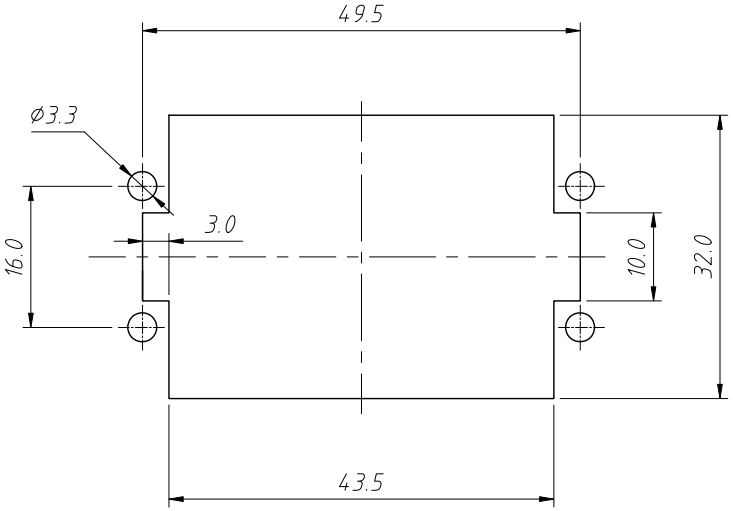

Panel Cut

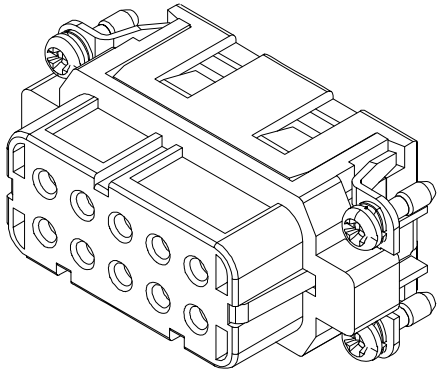

Order Information:

L-KLS1-HA-010 FC

L:RoHS
HA series
No of contacts
Type:
Female Crimp Terminal

ANGLE TOLERANCE	PROJECTION		Description:	Heavy Duty Connectors,HA series 10 Contacts,Female Crimp Terminal
±3°				
GENERAL TOLERANCE	UNITS	mm	KLS P/N:	L-KLS1-HA-010FC
x.x ±0.30	SHEET SIZE	A4		NingBo KLS ELECTRONIC CO.,LTD.
x.xx ±0.20	Draw:	Jenny	2025-05-07	
x.xxx ±0.10	Check:	Daniel	2025-05-07	