RoHS Compliance

| REV | SYM | Revision Record | Appr. | Date |
|---|---|---|---|---|
| V0 | KLS01695 | New Version Release | Jenny | 2025-04-23 |
| | | | | |

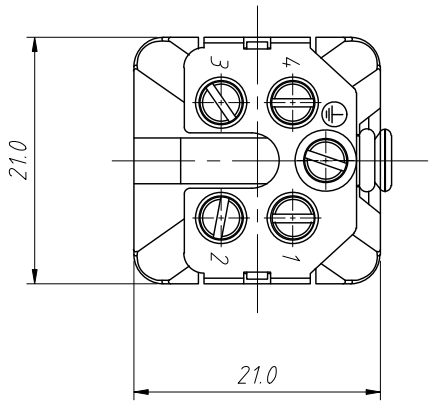


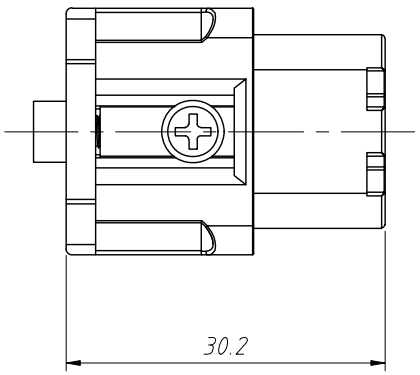


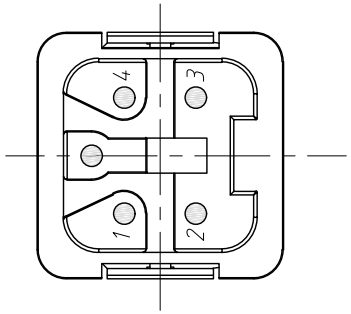


Material:
Housing:Polycarbonate,UL 94 V-0
Colour:RAL 7032 (Light grey)
Contacts:Copper Alloy,Hard-silver plated
Wire gauge:0.75-1.5mm $^2$ (18-16 AWG)
Tightening Torque:0.25N.m
Terminal:Screw terminal

Electrical Characteristics:
Number of contacts:4+PE
Rated Current:10A
Rated Voltage-ground:230V
Rated Voltage-conductor:400V
Rated Impulse Voltage:4KV
Pollution Degree:3
Rated Voltage Acc.to UL CSA:600V
Insulation Resistance:$10^{10}$ Ω Min
Contact Resistance:1mΩ Max
Limiting Temperatures:-40°C ~ +125°C
Mating cycles:500 Times Min

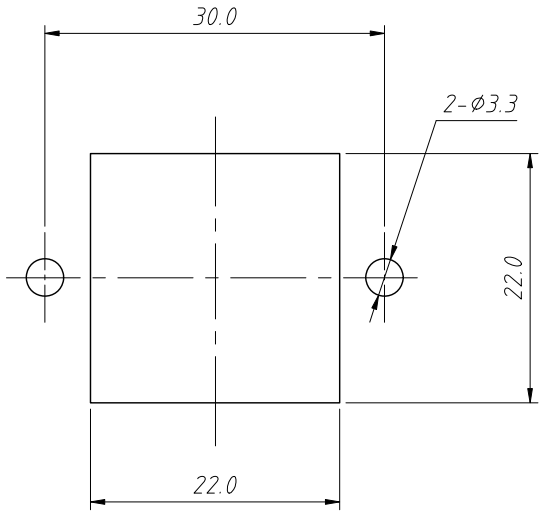


Panel Cut

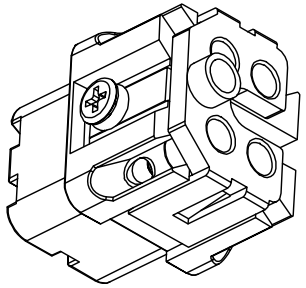

Order Information:

L-KLS1-HA-004 F

- L:RoHS
- HA series
- No of contacts
- Type:
- Female Screw terminal

| ANGLE TOLERANCE | PROJECTION | | Description: | Heavy Duty Connectors,HA series 4 Contacts,Female Screw terminal |
|---|---|---|---|---|
| ±3° | | | | |
| GENERAL TOLERANCE | UNITS | mm | KLS P/N: | L-KLS1-HA-004F |
| x.x ±0.30 | SHEET SIZE | A4 | | NingBo KLS ELECTRONIC CO.,LTD. |
| x.xx ±0.20 | Draw: | Jenny | 2025-04-23 | |
| x.xxx ±0.10 | Check: | Daniel | 2025-04-23 | |