RoHS Compliance

REV	SYM	Revision Record	Appr.	Date
V0	KLS13035	New Version Release	Song	2025-06-12

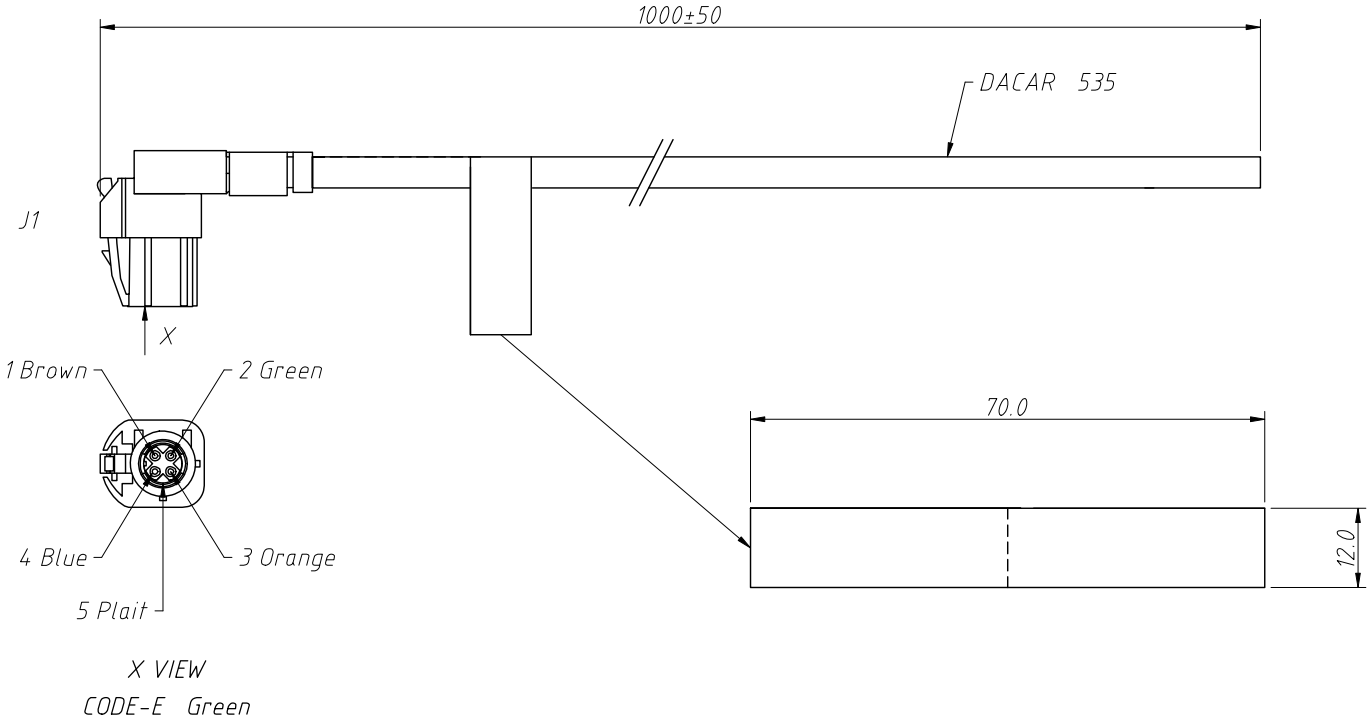

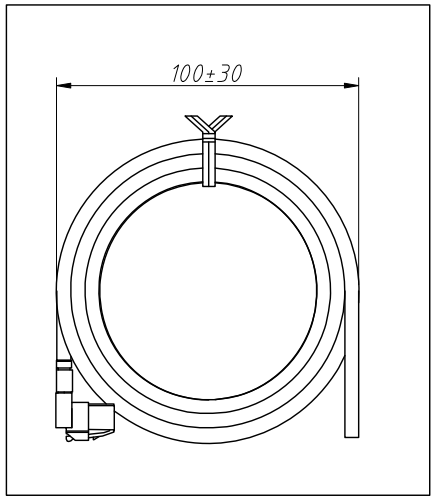

Cable Tie Schematic

Pin Assignment

J1	Color	J2
1	Brown	CUT
2	Green	CUT
3	Orange	CUT
4	Blue	CUT
5	Plait	CUT

ANGLE TOLERANCE	PROJECTION		Description:	
±3°				Fakra Connector With Cable
GENERAL TOLERANCE	UNITS	mm	KLS P/N:	L-KLS1-HSD-FAKRA11-6002-1-L1M
x.x ±0.30	SHEET SIZE	A4		
x.xx ±0.20	Draw:	Song	2025-06-12	NingBo KLS ELECTRONIC CO.,LTD.
x.xxx ±0.10	Check:	Daniel	2025-06-12	

RoHS Compliance

REV	SYM	Revision Record	Appr.	Date
V0	KLS13035	New Version Release	Song	2025-06-12

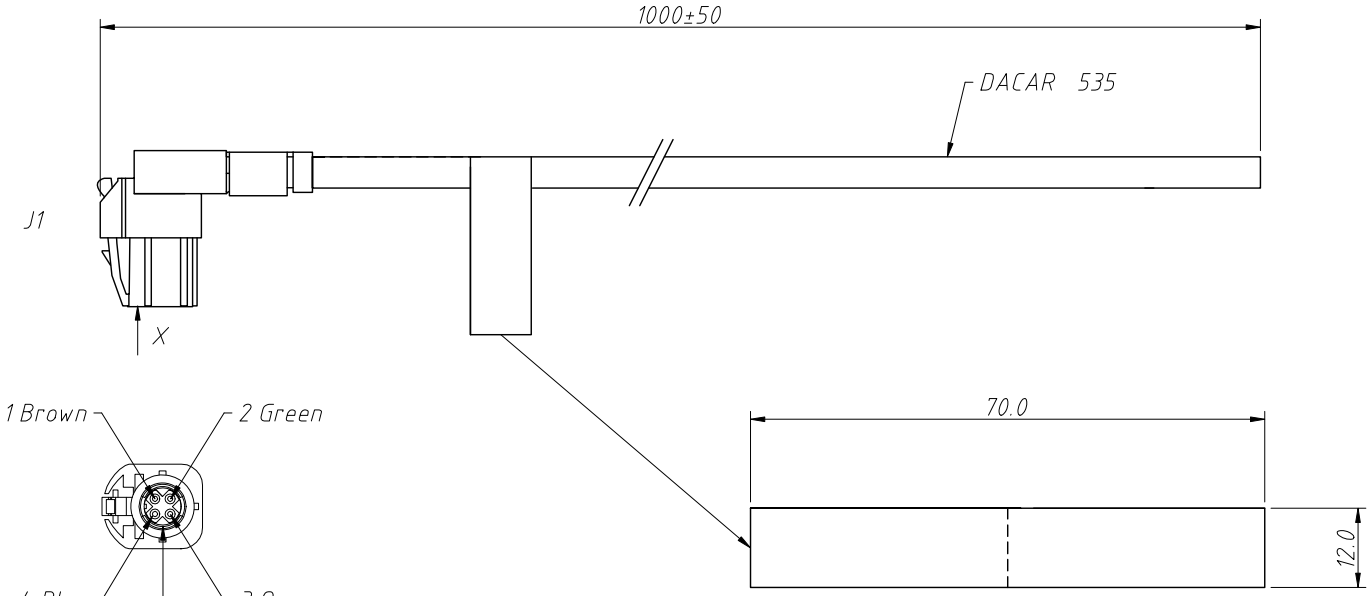

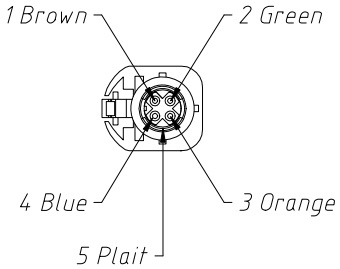

X VIEW

CODE-A Black

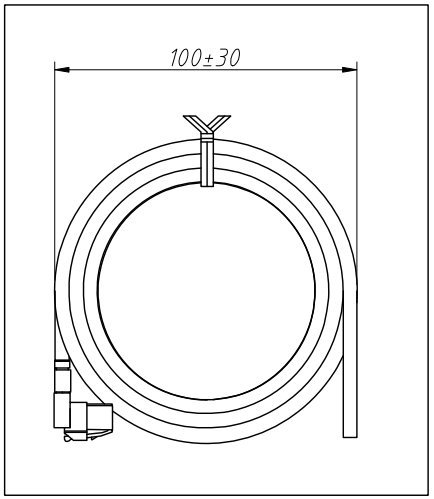

Cable Tie Schematic

Pin Assignment

J1	Color	J2
1	Brown	CUT
2	Green	CUT
3	Orange	CUT
4	Blue	CUT
5	Plait	CUT

ANGLE TOLERANCE	PROJECTION		Description:	
±3°				Fakra Connector With Cable
GENERAL TOLERANCE	UNITS	mm	KLS P/N:	L-KLS1-HSD-FAKRA11-9005-1-L1M
x.x ±0.30	SHEET SIZE	A4		
x.xx ±0.20	Draw:	Song	2025-06-12	NingBo KLS ELECTRONIC CO.,LTD.
x.xxx ±0.10	Check:	Daniel	2025-06-12	