RoHS Compliance

REV	SYM	Revision Record	Appr.	Date
V0	KLS01149	New Version Release	Song	2025-05-22

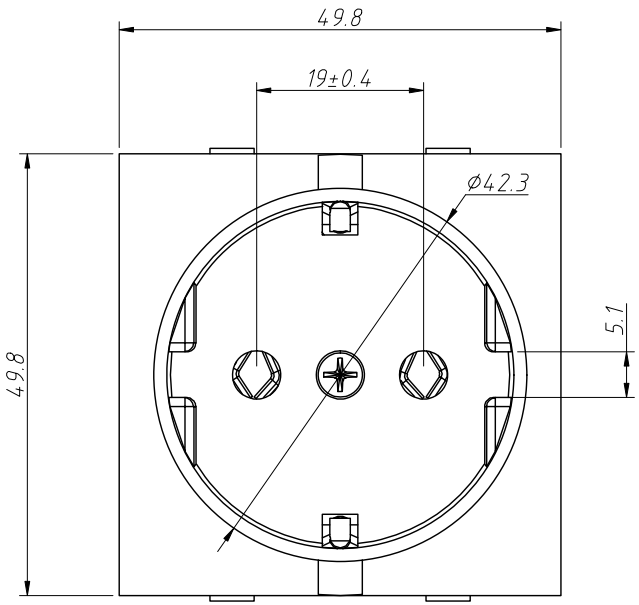

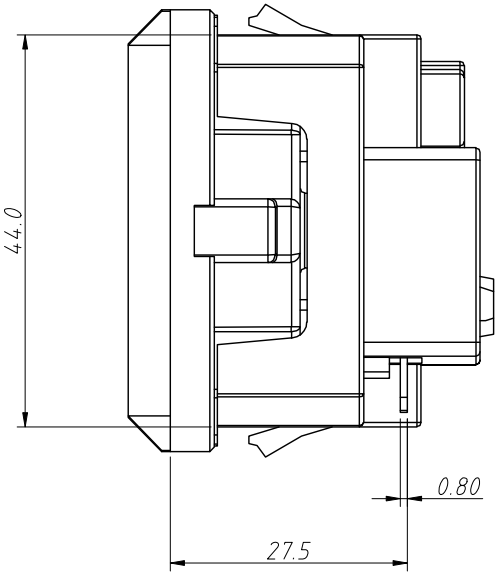

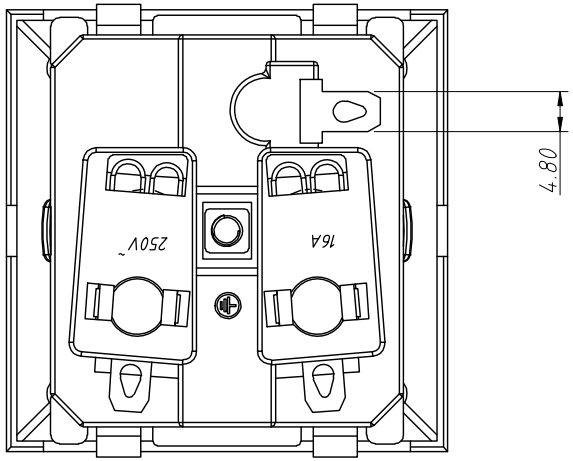

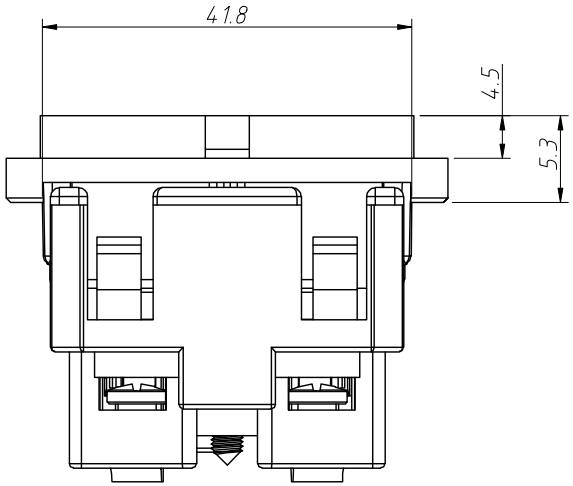

Electric:

Rating:16A 250V AC

Insert And Extract Force:1.36kgf~6.8kgf

Terminal Strength:≥80N

Operating Life:≥5000 Cycles

Withstand Voltage: Between All Terminals:2500VAC (50-60Hz)1 Min

Terminals To Base:3750V AC (50-60Hz)1 Min

Leakage Current:1mA

Insulation Resistance:≥100MΩ 500V DC

ANGLE TOLERANCE	PROJECTION		Description:	AC Outlet
±3°				
GENERAL TOLERANCE	UNITS	mm	KLS P/N:	L-KLS1-AS-504
.x ±0.30	SHEET SIZE	A4		NingBo KLS ELECTRONIC CO.,LTD.
.xx ±0.20	Draw:	Song	2025-05-22	
.xxx ±0.10	Check:	Daniel	2025-05-22	