RoHS Compliance

| REV | SYM | Revision Record | Appr. | Date |
|---|---|---|---|---|
| V0 | KLS01149 | New Version Release | Song | 2025-04-18 |
| | | | | |

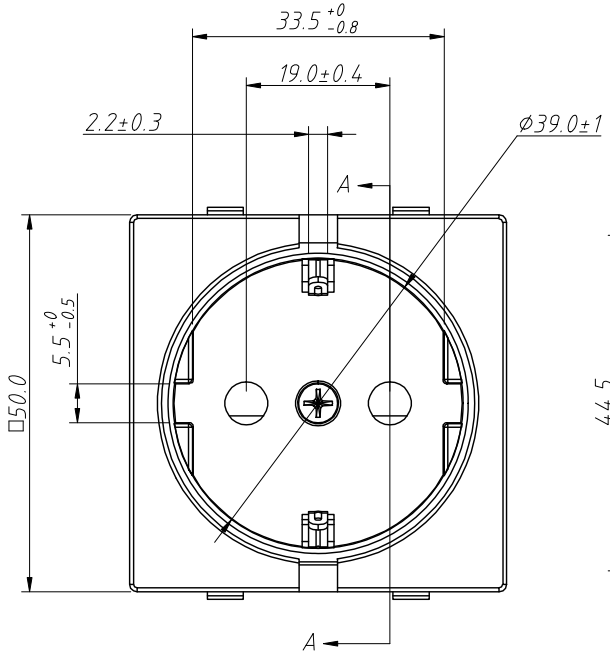


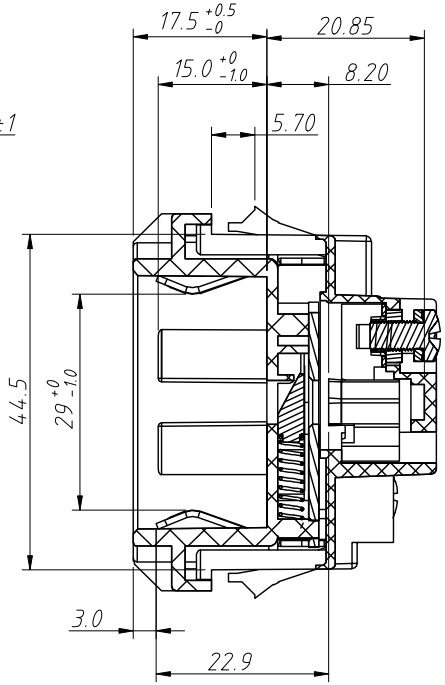


SECTION A-A

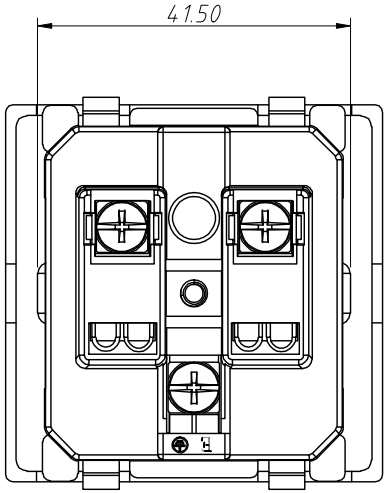


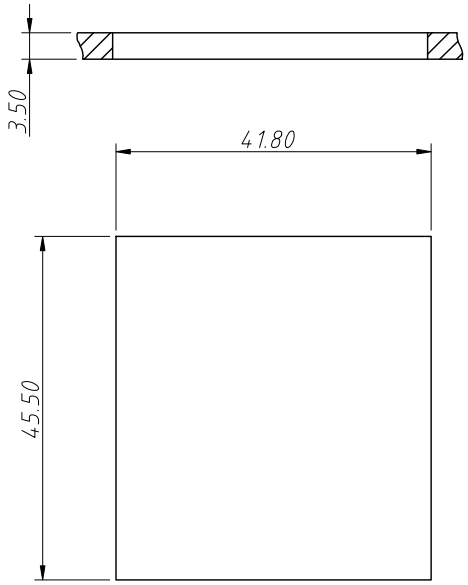


Panel Cut-Out

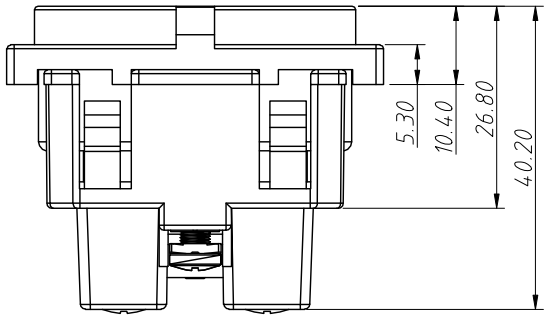


Electric:

Rating:16A 250V AC TUV

Insert And Extract Force:1.36kgf ~6.8kgf

Operating Life:≥5000 Cycles

Withstand Voltage: Between All Terminals:2500VAC (50-60Hz)1 Min

Terminals To Base:3750V AC (50-60Hz)1 Min

Leakage Current:1mA

Insulation Resistance:≥100MΩ 500V DC

| ANGLE TOLERANCE | PROJECTION | | Description: | AC Power Socket |
|---|---|---|---|---|
| ±3° | | | | |
| GENERAL TOLERANCE | UNITS | mm | KLS P/N: | L-KLS1-AS-503B |
| .x ±0.30 | SHEET SIZE | A4 | | NingBo KLS ELECTRONIC CO.,LTD. |
| .xx ±0.20 | Draw: | Song | 2025-04-18 | |
| .xxx ±0.10 | Check: | Daniel | 2025-04-18 | |