RoHS Compliance

REV	SYM	Revision Record	Appr.	Date
V0	KLS08269	New Version Release	Jenny	2025-03-17

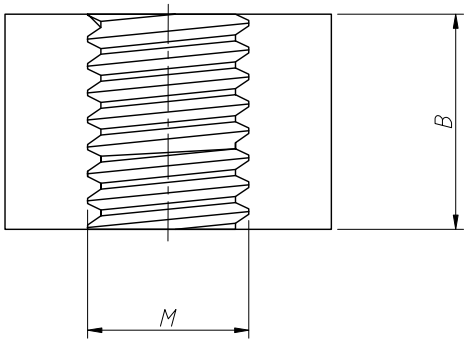

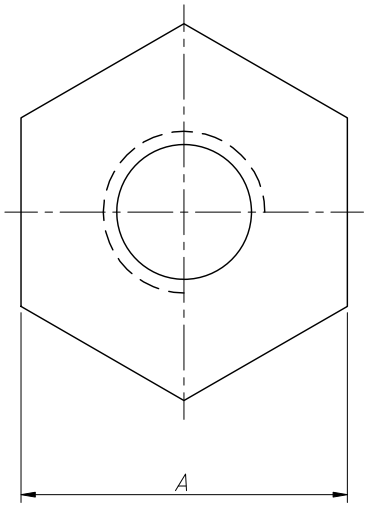

Notes:
1.Material:Nylon66,UL 94 V-2,Nature
2.As a fixed part between the PC board and the motherboard, the hexagonal shape does not slide

size	A	B	Packing
M2.5	4.8	2.0	1000PCS
M3	5.5	2.6	
M4	7.0	3.1	
M5	8.8	4.0	
M6	10.0	5.0	
M8	12.8	5.9	
M10	16.6	9.0	500PCS

ANGLE TOLERANCE	PROJECTION		Description:	
±3°				Plastic Nut
GENERAL TOLERANCE	UNITS	mm	KLS P/N:	L-KLS8-0318-PNT-MXX
.x ±0.30	SHEET SIZE	A4		
.xx ±0.20	Draw:	Jenny	2025-03-17	NingBo KLS ELECTRONIC CO.,LTD.
.xxx ±0.10	Check:	Daniel	2025-03-17	