RoHS Compliance

REV	SYM	Revision Record	Appr.	Date
V0	KLS07053	New Version Release	Song	2025-02-27

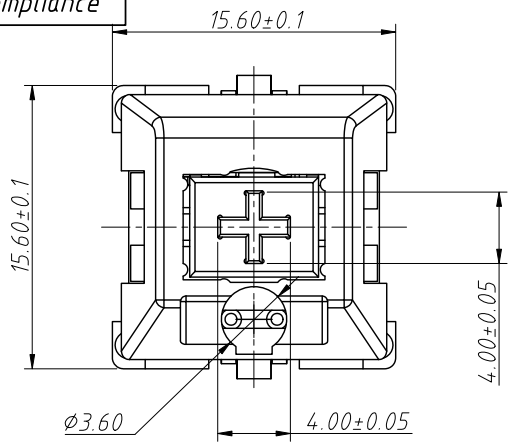

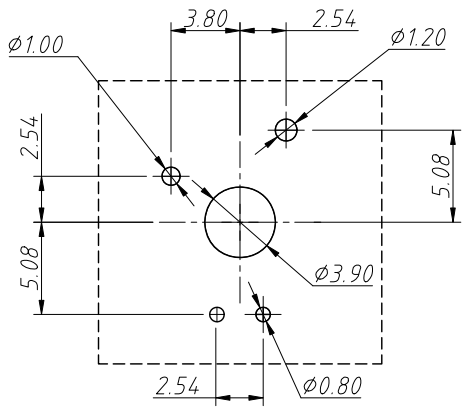

Recommanded PCB Layout

Tolerance:±0.05mm

Material:

Terminal:Brass, Tin Plated

Terminal:Copper, Silver Plated

Housing:PA66, Black

Kone:POM, Black

Spring:SUS

Electric:

Rated voltage: DC 5V

Rated current: 10mA

Insulation resistance: 100 MΩ (Min)

Contact resistance: 500 mΩ (Max)

Action force: 60±15gf

Free position: 15.0 ± 0.50mm

Total travel distance: 3.60-4.00mm

Start stroke: 2.00 ± 0.60mm

Mechanical lifespan: 50000000 cycles

Electrical lifespan: 50000000 cycles

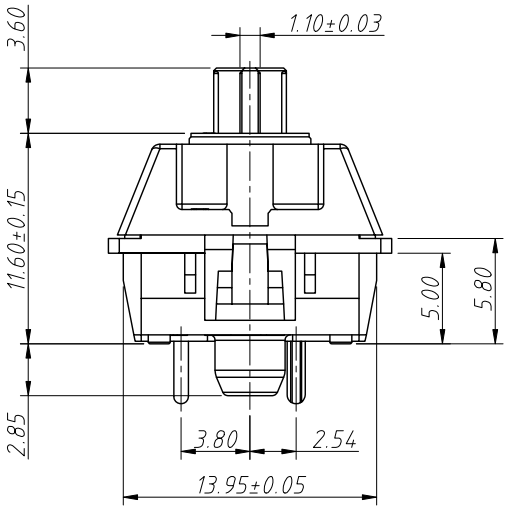

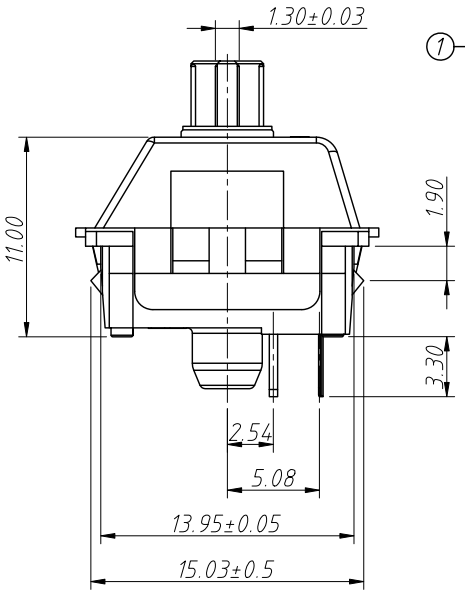

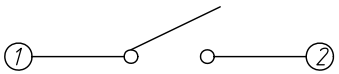

Circuit Diagram

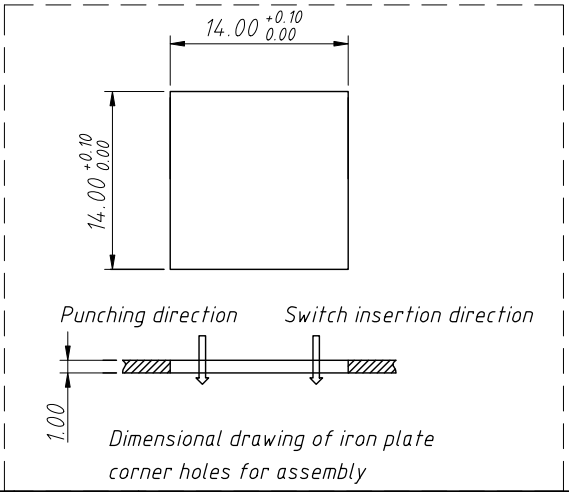

Dimensional drawing of iron plate corner holes for assembly

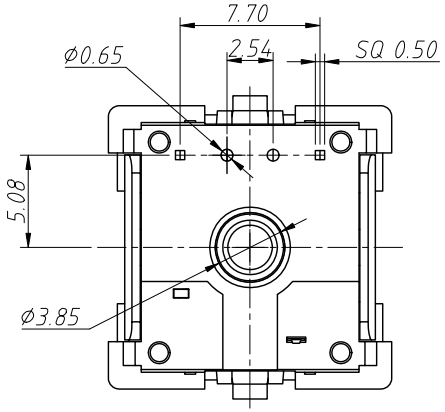

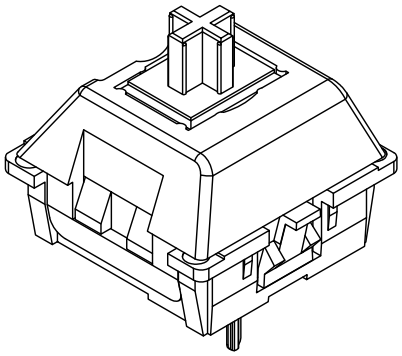

ANGLE TOLERANCE	PROJECTION		Description:	
±3°			Mechanical Keyboard switches	
GENERAL TOLERANCE	UNITS	mm	KLS P/N:	L-KLS7-KS02-B
.x ±0.30	SHEET SIZE	A4		
.xx ±0.20	Draw:	Song	2025-02-27	NingBo KLS ELECTRONIC CO.,LTD.
.xxx ±0.10	Check:	Daniel	2025-02-27	