RoHS Compliance

REV	SYM	Revision Record	Appr.	Date
V0	KLS02006	New Version Release	Song	2024-09-09

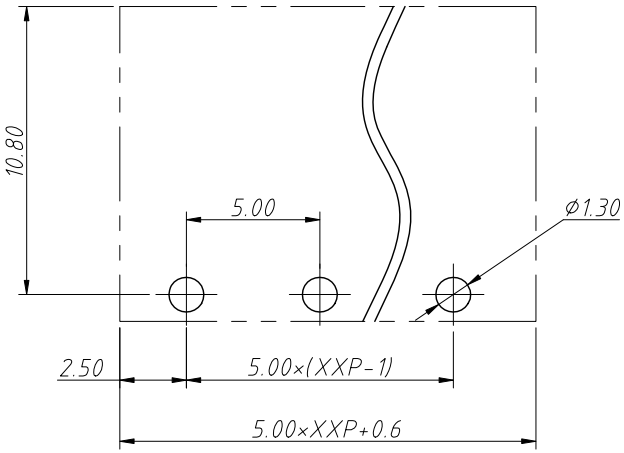

Recommended PCB Layout

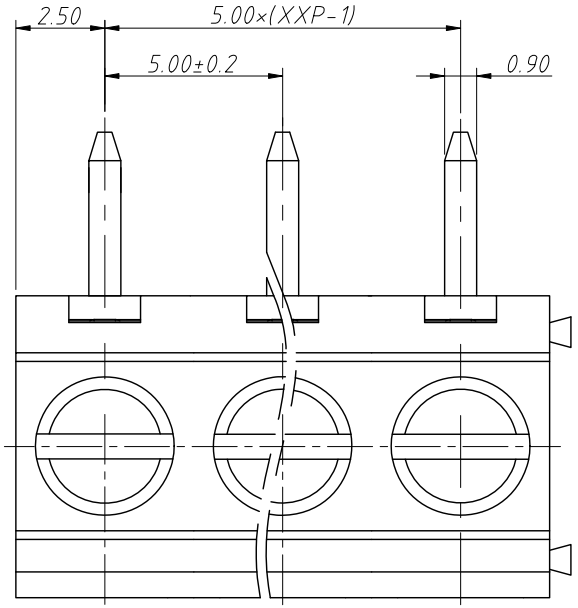

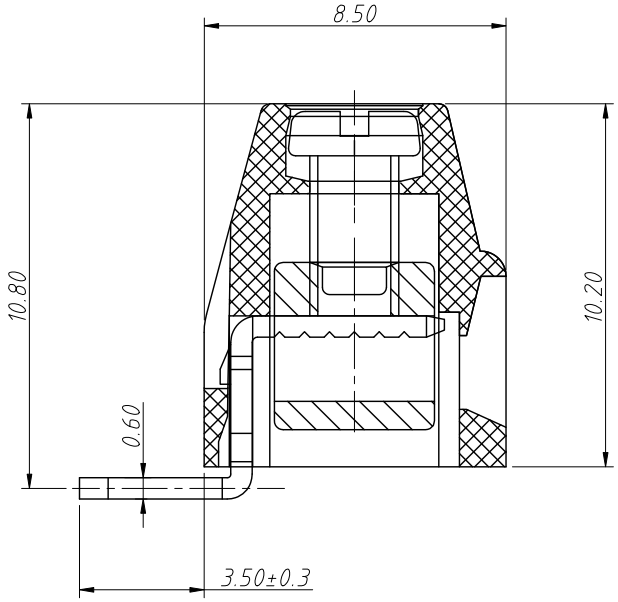

SECTION A-A

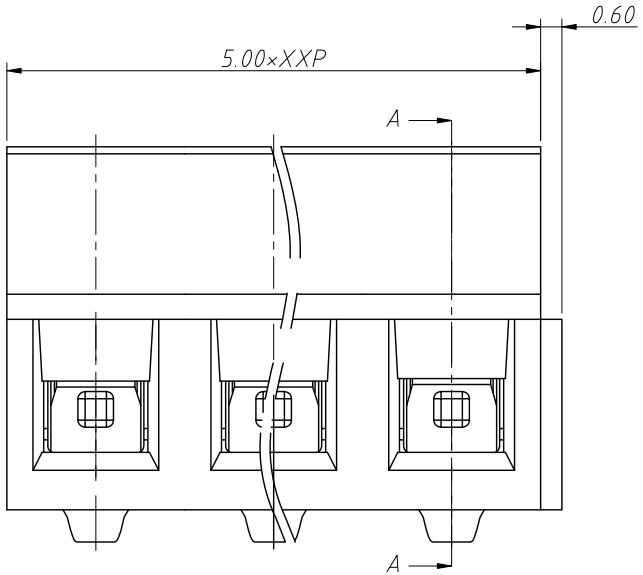

Electrical Characteristics	UL	IEC
Rated Voltage	300V	250V
Rated Current	12A	13.5A
Withstand Voltage	AC2000V/1min	---
Wire Range	26~14 AWG	1.5mm^2

Material and other:
Housing:PA66, UL94V-0
Pin Header:Coppy Alloy,Sn Plated
Screw/Torque:Steel,M2.5,Zn Plated/0.4N.m
Cage:Coppy Alloy,Ni Plated
Contact Resistance:20mΩ Max
Insulation Resistance:500MΩ/DC500V Min
Stripping Length:5~6mm
Temp. Range:-40°C ~ +105°C
MAX Soldering:250°C For 5S

Order Information

L-KLS2-127R-5.00-XXP-X X

RoHS
Terminal Block
Pitch:5.00mm
No.:Of (02~24) Pin
Color:1=Gray 2=Blue 3=Black
4=Green 5=Orange 6=Red
7=Transp 8=Yellow 9=White
Screw:SC=Slot/Cross
S-Slot Screw C-Cross Screw

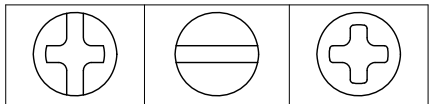

SC=Slot/Cross S-Slot Screw C-Cross Screw

ANGLE TOLERANCE	PROJECTION		Description:	
±3°			Pitch 5.00mm Screw Fixation Terminal Block	
GENERAL TOLERANCE	UNITS	mm	KLS P/N:	L-KLS2-127R-5.00-XXP-XX
0~30 ±0.50	SHEET SIZE	A4		
30~60 ±0.75	Draw:	Song	2024-09-09	NingBo KLS ELECTRONIC CO.,LTD.
60~90 ±1.00	Check:	Daniel	2024-09-09	