RoHS Compliance

REV	SYM	Revision Record	Appr.	Date
V0	KLS02006	New Version Release	Song	2024-08-19

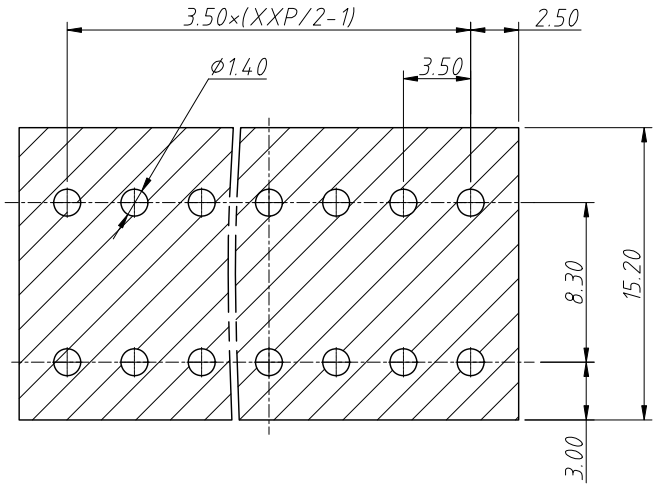

Recommended PCB Layout

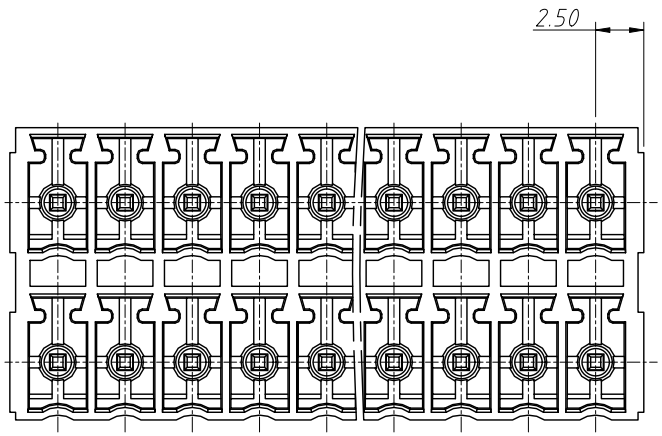

Electrical Characteristics	UL	IEC
Rated Voltage	300V	160V
Rated Current	8A	8A
Withstand Voltage	1600V / 1 min	2.5KV

Material and other:
Housing:LCP, UL94V-0
Pin:Copper Alloy,Sn Plated
Operating Temperature:-40°C ~ +130°C
Soldering Temperature:285°C /10S

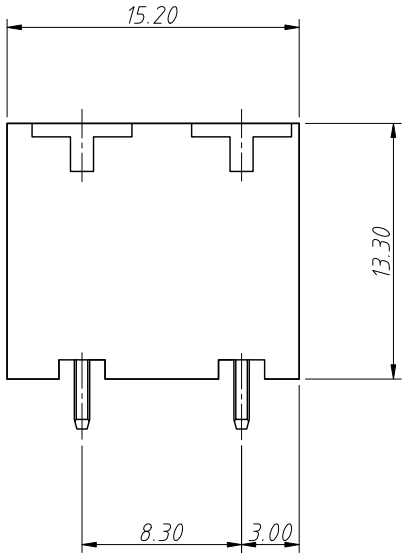

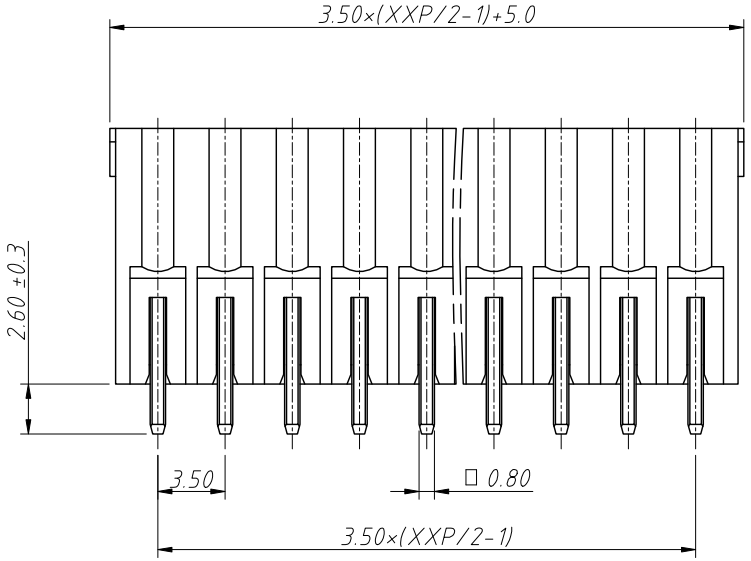

Order Information

L-KLS2-THREDVH-3.50-XXP-X

- RoHS
- Terminal Block
- Pitch:3.50mm
- No.:Of (04 ~ 48) Pins
- Color:

1=Gray	2=Blue	3=Black
4=Green	5=Orange	6=Red
7=Transp	8=Yellow	9=White

ANGLE TOLERANCE	PROJECTION		Description:	
±3°			Pitch 3.50mm Pluggable Terminal Block ,Socket	
GENERAL TOLERANCE	UNITS	mm	KLS P/N:	L-KLS2-THREDVH-3.50-XXP-X
0 ~ 30 ±0.50	SHEET SIZE	A4		
30 ~ 60 ±0.75	Draw:	Song	2024-08-19	NingBo KLS ELECTRONIC CO.,LTD.
60 ~ 90 ±1.00	Check:	Daniel	2024-08-19	