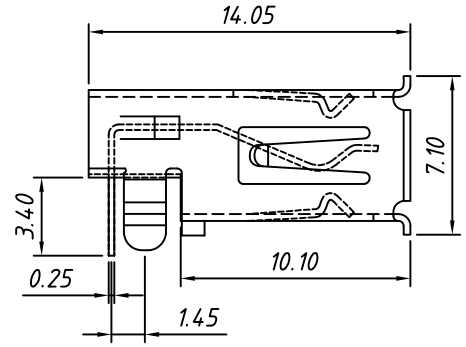

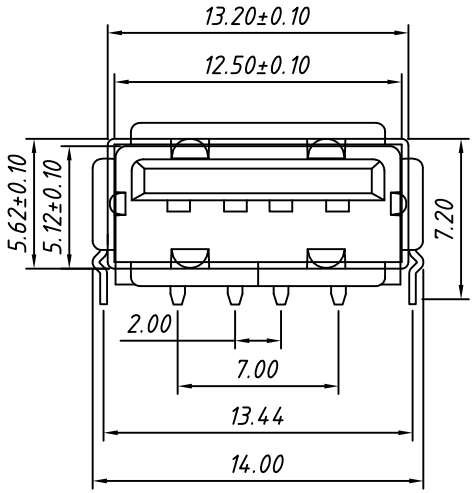

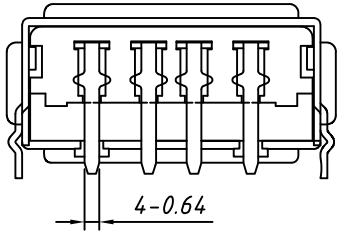

Material
Housing:Thermoplastic plastics.
Terminals:Copper Alloy.Gold plated in contact area;
Tin plated in termination Nickel plated overall.
Shell:Copper Alloy.Nickel plated overall.

Electrical:
Rating Current:1.5Ampere.
Rating Voltage:30V Max.
Contact Resistance:30mΩ Mill.
Insulation Resistance:1000MΩ Min.

Mechanical Characteristics:
Connector Mating force:35N Max (3.57Kgf)
Connector Unmating force:10N Min (1.02Kgf)
Durability:1500 Cycles.

Environment Characteristics:
Operating temperature:-0 °C to +50 °C

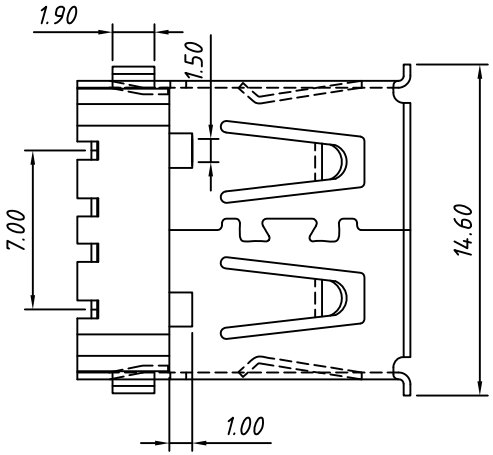

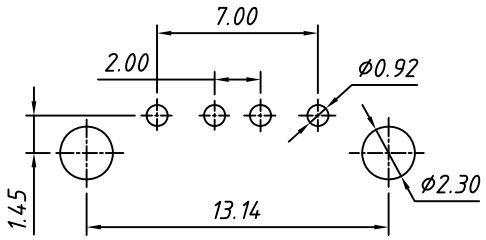

RECOMMENDED PCB LAYOUT
TOLERANCE:±0.05

Order Information

L-KLS1- 1828 - B

- Color:W=White B=Black
- USB 2.0 AF CONN
- RoHS

GENERAL TOLERANCE	PROJECTION		Description: CONN COM TYPE A USB Female MID MOUNT H2.0mm
X. ±0.50	UNITS	mm	
.X ±0.25	SCALE	1:1	
.XX ±0.10	Draw by:	Jenny	KLS P/N: L-KLS1-1828-X
ANGLE TOLERANCE	Check by:		NingBo KLS ELECTRONIC CO.,LTD.
X. ±5°	Date	2018-03-01	
.X ±3°			
.XX ±2°	SHEET	1 OF 1	