KLS electronic
www.cnkls.com

XII

RJ45 with Transformer

KLS12-TL180 1000Base1x4 Tab-Down RJ45

Electrical Specifications:

Insertion Loss: 1-100MHZ -1.0dB MAX

Return Loss: 1-30MHZ -16.0dB MIN

30-60MHZ -14.0dB MIN

60-80MHZ -10.0dB MIN

Cross Talk: 1-30MHZ -40.0dB MIN

30-60MHZ -35.0dB MIN

60-80MHZ -30.0dB MIN

CMR: 1-100MHZ -35.0dB MIN

Hi-Pot: 1500v AC 6S 1mA

OCL:350uH MIN @ 100KHZ 100mV 8mA DC

Turn Ratio: 1CT:1CT+ /-3%

Contacts: 0.35mm thick phos bronze plated with 6u' gold in contact area

Housing Material: PBT Black

Operating temperature range:0°C to + 70°C

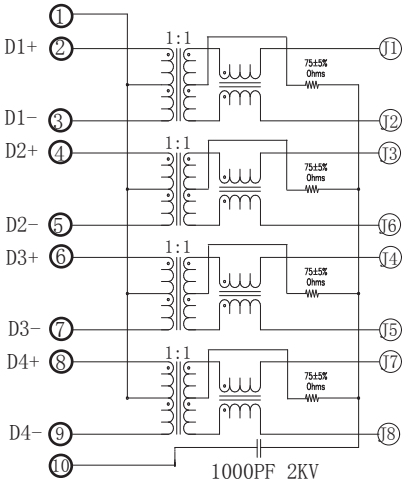

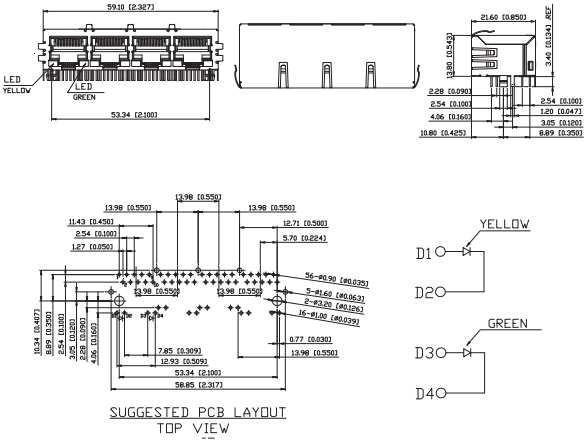

ORDER INFORMATION

L-KLS12-TL180 -1X4 - G

Part Number	Part Number	LED Style
	1x4Ports	G-Green/Yellow