RJ45 with Transformer

KLS12-TL076 100 Base 1x1 Tab-up RJ45

Electrical Specifications:

Insertion Loss: 1-100MHZ -1.0dB MAX

Return Loss: 1-30MHZ -16.0dB MIN
30-60MHZ -14.0dB MIN
60-80MHZ -10.0dB MIN

Cross Talk: 1-30MHZ -40.0dB MIN
30-60MHZ -35.0dB MIN
60-80MHZ -30.0dB MIN

CMR: 1M-100MHZ -35dB MIN

Hi-Pot: 1500v AC 6S 1mA

Turn Ratio: 1CT:1CT+/-3%

OCL:350uH MIN @ 100KHZ 100mV 8mA DC

Contacts: 0.35mm thick phos bronze plated with 6u' gold in contact area

Housing Material:PA66 Black

Operating temperature range:-40℃-+85℃

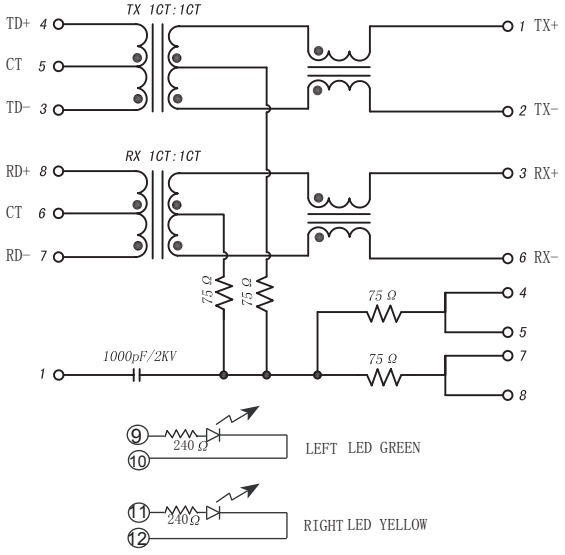

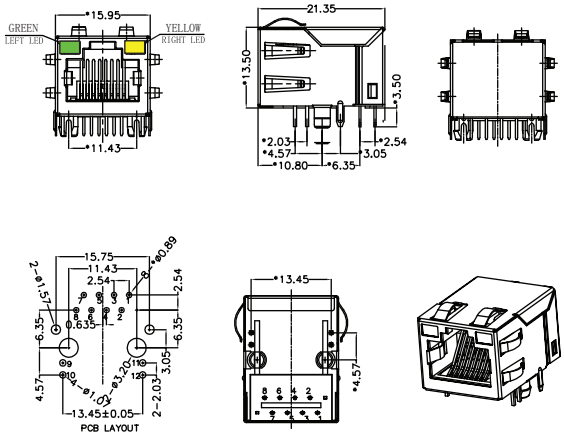

ORDER INFORMATION

L-KLS12-TL076 -1X1 - G

Part Number	Ports	LED Style
	1x1 Ports	G/Green/Yellow