KLS electronic
www.cnkls.com

XLR CONNECTOR SERIES

KLS1-XLR-S15 (XLR Socket)

Electrical Specification:
Contact resistance: ≤ 0.03Ω
Insulation resistance: ≥ 100mΩ
Withstand voltage: 500V AC (50Hz)/minute
Rated load: 50V DC, 1A
Insertion and extraction force: 4-40N
Temperature range: -30°C~+80°C

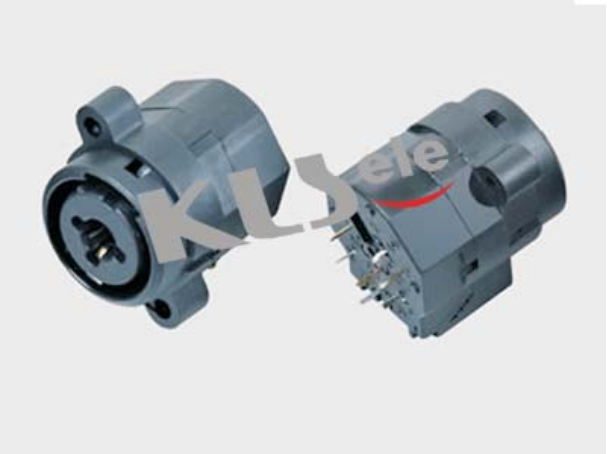

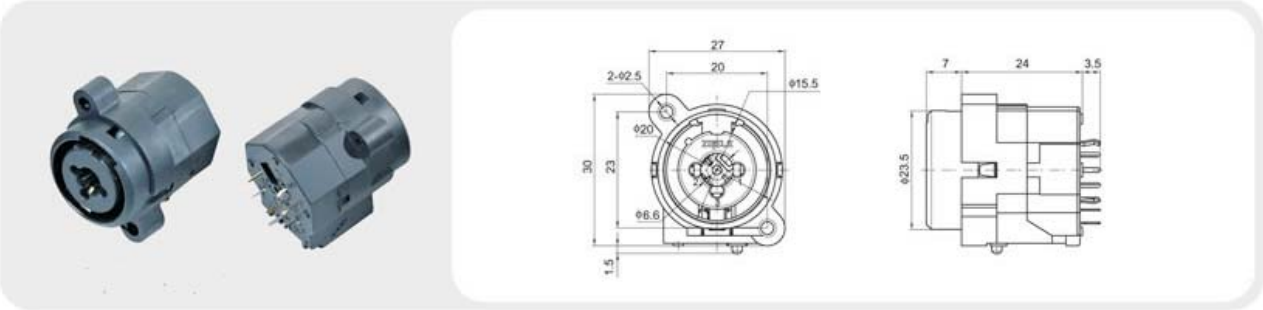

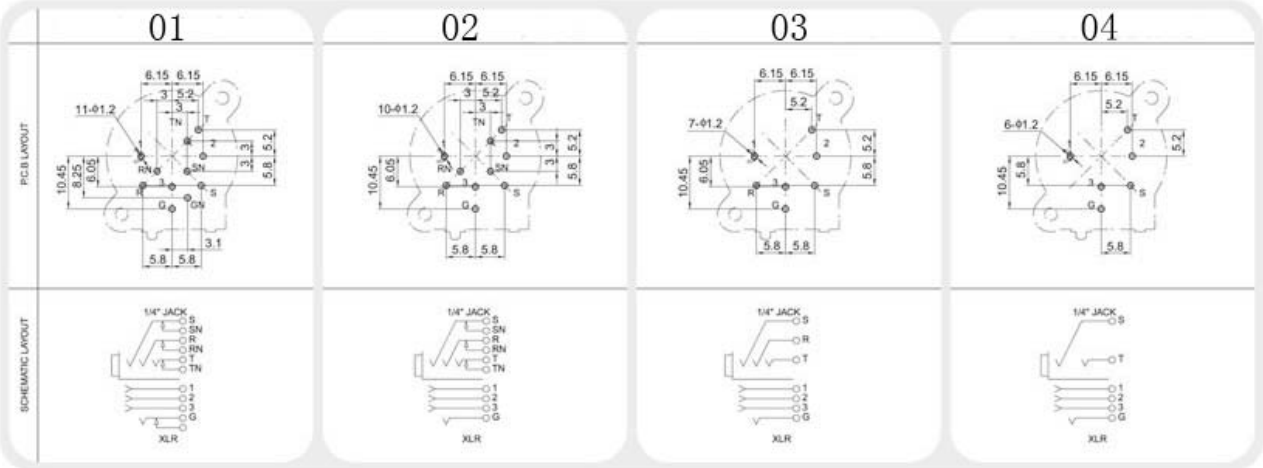

ORDER INFORMATION

Product NO.:KLS1-XLR-S15-01

Pos. NO.

XLR Jack series

01, 02, 03 Use this chart to