RCA JACK Series

KLS1-RCA-204 PIN Jack+S PCB Mount R/A Jack

Electrical Specification:

Contact resistance : 30mΩ Max
Insulation resistance : 50MΩ Min at DC 500V
Withstand voltage : AC 500V(50Hz) 1min
Operating Temperature : -25°C~+85°C

Materials

Sealed Plate : Steel
Earth Fitting : Brass
Terminal : Brass
Housing : PBT UL94V~0
Washer : ABS UL94V~0
Outer Contact : Brass
Ground Contact : Brass
Center Contact : Brass

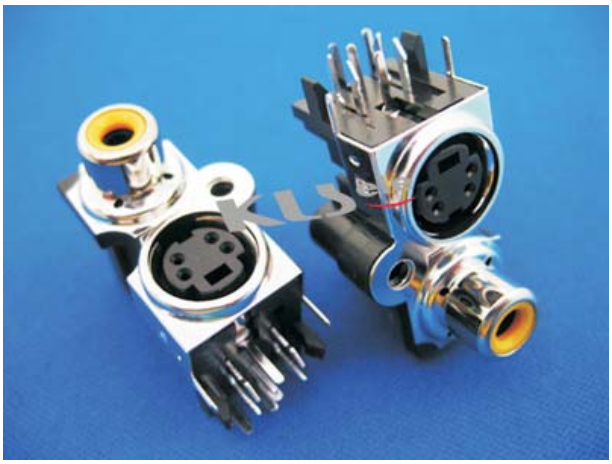

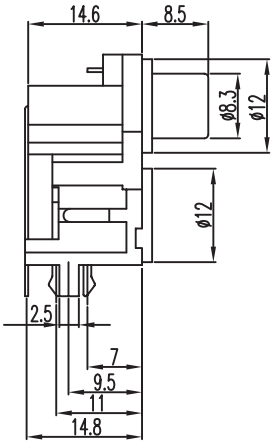

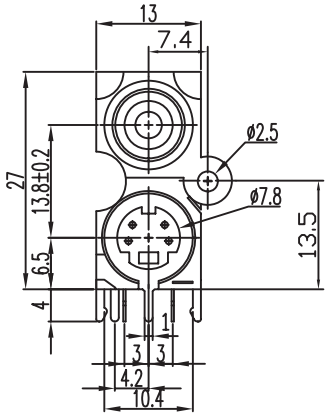

MODEL NO.	RCA-204	
	S JACK	PIN JACK
SCHEMATIC	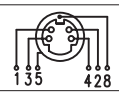	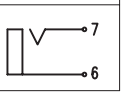

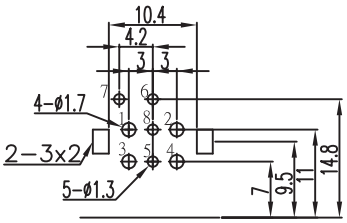

T:1.6 Dimensions of PC board holes
Tolerance : ±0.1(Printed-top view)

ORDER INFORMATION

Product NO.: KLS1-RCA-204-N-R

Pos. NO.
RCA Jack Type
N:Nickel Plated

Color: R : Red
B : Black
Y : Yellow
W : White