KLS electronic
www.cnkls.com

Tact Switch Series

KLS7-TS6650 6x6mm Tact Switch Series

ELECTRICAL

1.Rating: 20mA 12VDC
2.Contact Resistance : 100mΩ Max.
3.Insulation Resistance: 100MΩ Min.
4.Dielectric Strength : AC250V(50/60Hz for 1minute)
5.Electrically Life: 100, 000cycles
6.Environment temperature:-20ºC~+70ºC
7.Operating Force: 180/250(±30gf)
8.Seal temperature:260ºC~ 280ºC

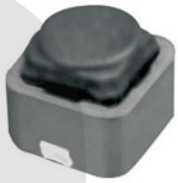

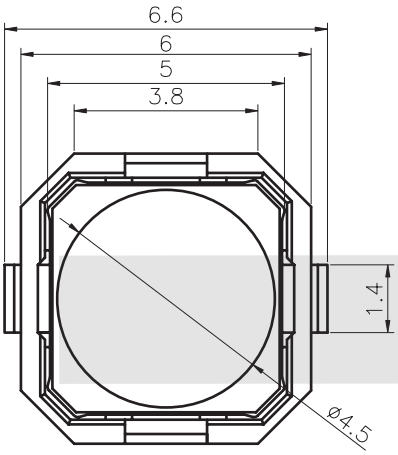

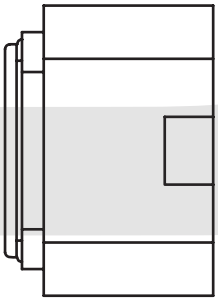

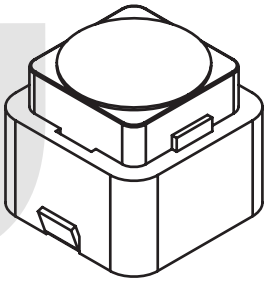

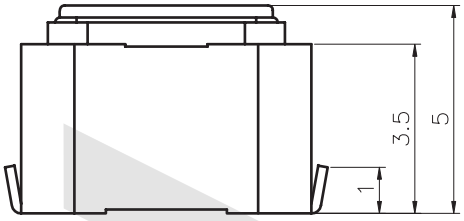

P.C.B Land Pattern

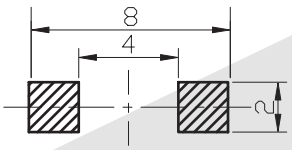

Circuit Diagram

ORDER INFORMATION

KLS7-TS6650 - 250 -T

Series No.

Operating Force :180~250gf

Packing: B-Bulk T-Tape