RoHS Compliance

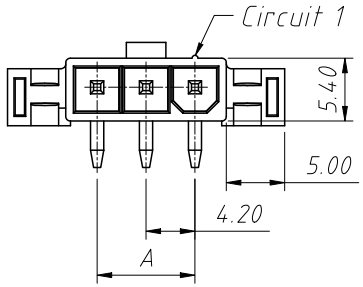

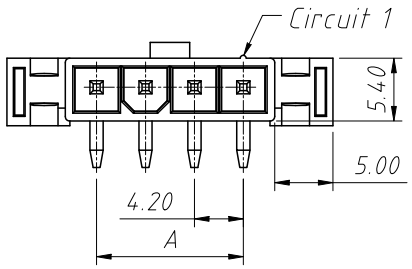

Material:
Housing:PA66,UL94V-0/2
Contacts:Brass
Finish:Tin-plated or Gold-flash

Electrical Characteristics:
Rated Current:7.0A AC,DC
Voltage rating:600V AC,DC
Temperature range:-25°C ~ + 85°C
Insulator Resistance:1000MΩ Min
Withstanding Voltage:1500V AC/minute
Contact Resistance:20mΩ Max

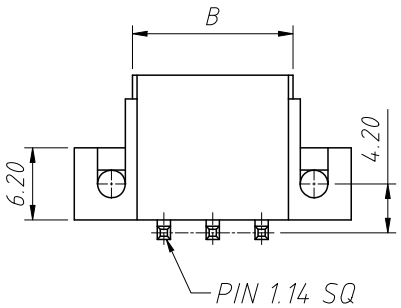

03P

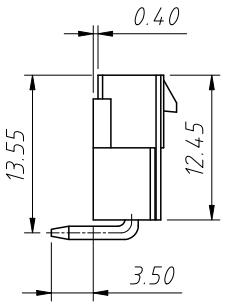

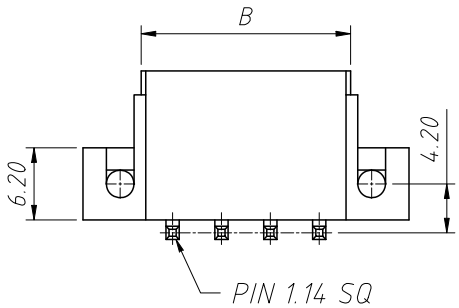

02P,04P,05P

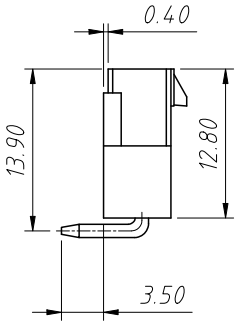

Pin	Dimensions(mm)	
	A	B
02	4.20	9.60
03	8.40	13.80
04	12.60	18.00
05	16.80	22.20
06	21.00	26.40

Order Information:

L-KLS1-4.20-1×02-RB

L: RoHS
Pitch:4.20mm
Pins:
1-Single layer
2-Double layer
No.of 02~06 pins
Type:
S / SW / SB-Straight male pin
R / RW / RB-Right angle male pin

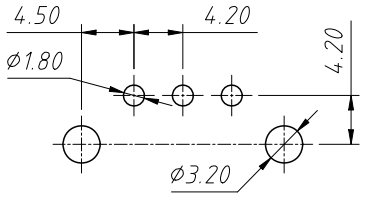

PCB Layout

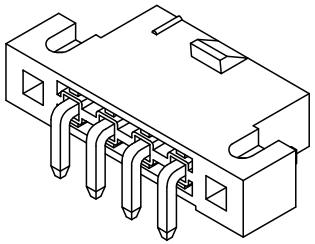

ANGLE TOLERANCE	PROJECTION		Description:	4.20mm Pitch Mini-Fit JR 5556 5557 5559 5566 5569 Wire To Board Connector
±3°				
GENERAL TOLERANCE	UNITS	mm	KLS P/N:	L-KLS1-4.20-1×02-RB
x.x ±0.30	SHEET SIZE	A4		NingBo KLS ELECTRONIC CO.,LTD.
x.xx ±0.20	Draw:	Daniel	2021-01-11	
x.xxx ±0.10	Check:	Daniel	2021-01-11	